Viscoelastic Structural Damper

Introduction

The model studies a forced response of a typical viscoelastic damper. Damping elements involving layers of viscoelastic materials are often used for reduction of seismic and wind induced vibrations in buildings and other tall structures. The common feature is that the frequency of the forced vibrations is low.

Model Definition

The geometry of the viscoelastic damper is shown in Figure 1, from Ref. 1. The damper consists of two layers of viscoelastic material confined between mounting elements made of steel.

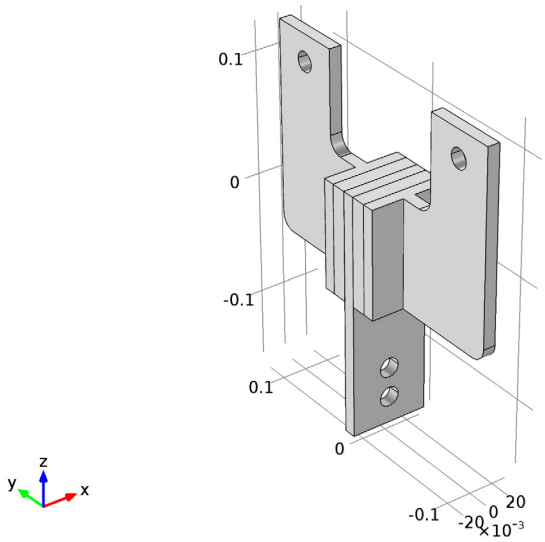

Figure 1: Viscoelastic damping element.

You model the viscoelastic layers by the generalized Maxwell model available in COMSOL Multiphysics. The generalized Maxwell model represents the viscoelastic material as a series of branches, each with a spring-dashpot pair. You can find more

details about this material model in the section "About Linear Viscoelastic Materials" on page 191 of the *Structural Mechanics Module User's Guide*.

Eighteen viscoelastic branches guarantee accurate representation of the material behavior for different excitation frequencies, when the damper is subjected to forced vibration. The values of the shear moduli and relaxation times for each branch are available in Ref. 1. They are summarized in the following table:

TABLE 1: MODEL DATA FOR THE VISCOELASTIC DAMPER MODEL

PROPERTY	VALUE	DESCRIPTION
G	$5.86 \cdot 10^{-2}$ MPa	Long time shear modulus
ρ	1.06 g/cm^3	Density
G_1	13,3 MPa	Shear modulus branch 1
τ_1	10^{-7} s	Relaxation time branch 1
G_2	286 MPa	Shear modulus branch 2
τ_2	10^{-6} s	Relaxation time branch 2
G_3	$2.91 \cdot 10^{2}$ MPa	Shear modulus branch 3
τ_3	$3.16 \cdot 10^{-6}$ s	Relaxation time branch 3
G_4	$2.12 \cdot 10^{2}$ MPa	Shear modulus branch 4
τ_4	10^{-5} s	Relaxation time branch 4
G_5	$1.12 \cdot 10^{2}$ MPa	Shear modulus branch 5
τ_5	$3.16 \cdot 10^{-5}$ s	Relaxation time branch 5
G_6	61.6 MPa	Shear modulus branch 6
τ_6	10^{-4} s	Relaxation time branch 6
G_7	29.8 MPa	Shear modulus branch 7
τ_7	$3.16 \cdot 10^{-4}$ s	Relaxation time branch 7
G_8	16.1 MPa	Shear modulus branch 8
τ_8	10^{-3} s	Relaxation time branch 8
G_9	7.83 MPa	Shear modulus branch 9
τ_9	$3.16 \cdot 10^{-3}$ s	Relaxation time branch 9
G_{10}	4.15 MPa	Shear modulus branch 10
τ_{10}	10^{-2} s	Relaxation time branch 10
G_{11}	2.03 MPa	Shear modulus branch 11
τ_{11}	$3.16 \cdot 10^{-2}$ s	Relaxation time branch 11
G_{12}	1.11 MPa	Shear modulus branch 12

©2012 COMSOL

TABLE 1: MODEL DATA FOR THE VISCOELASTIC DAMPER MODEL

PROPERTY	VALUE	DESCRIPTION
τ_{12}	0.1 s	Relaxation time branch 12
G_{13}	0.491 MPa	Shear modulus branch 13
τ_{13}	0.316 s	Relaxation time branch 13
G_{14}	0.326 MPa	Shear modulus branch 14
τ_{14}	1 s	Relaxation time branch 14
G_{15}	$8.25 \cdot 10^{-2}$ MPa	Shear modulus branch 15
τ_{15}	3.16 s	Relaxation time branch 15
G_{16}	0.126 MPa	Shear modulus branch 16
τ_{16}	10 s	Relaxation time branch 16
G_{17}	$3.73 \cdot 10^{-2}$ MPa	Shear modulus branch 17
τ_{17}	100 s	Relaxation time branch 17
G_{18}	$1.18 \cdot 10^{-2}$ MPa	Shear modulus branch 18
τ_{18}	1000 s	Relaxation time branch 18

One of the mounting elements is fixed; the other two are loaded with periodic forces with frequencies in the range 0–5 Hz.

Results and Discussion

The frequency response at 5 Hz is shown in Figure 2.

In the frequency domain, the viscoelastic properties of the material appear as the storage modulus and loss moduli. The computed variation of the viscoelastic moduli with frequency is shown in Figure 3. The result is in very good agreement with the experimental data (Figure 7 in Ref. 2)

.

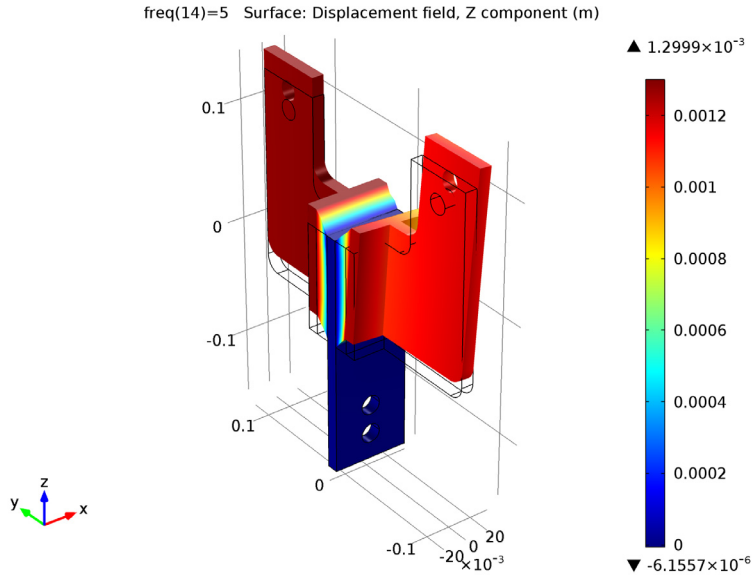

Figure 2: Frequency response.

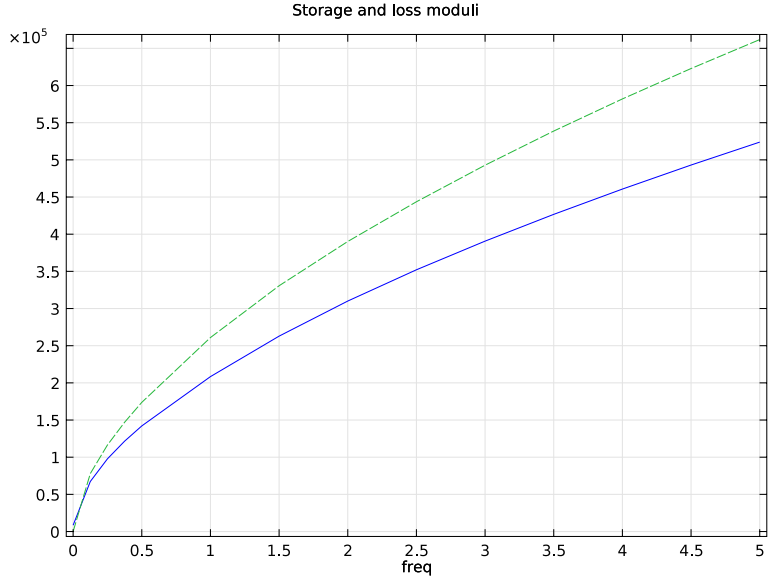

Figure 3: Viscoelastic storage modulus (solid line) and loss modulus (dashed line). Both quantities are normalized by 6.895 to simplify the comparison with Ref. 2.

 ©2012 COMSOL

Notes About the COMSOL Implementation

You model in 3D and use the Solid Mechanics interface, in which the Viscoelastic material model is available among the predefined material models.

References

1. S.W. Park "Analytical Modeling of Viscoelastic Dampers for Structural and Vibration Control," *International Journal of Solids and Structures*, vol. 38, pp. 694–701, 2001.

2. K.L. Shen and T.T. Soong, "Modeling of Viscoelastic Dampers for Structural Applications," *Journal of Engineering Mechanics*, vol. 121, pp. 694–701, 1995.

Model Library path: `Structural_Mechanics_Module/Dynamics_and_Vibration/viscoelastic_damper_frequency`

Modeling Instructions

MODEL WIZARD

1 Go to the **Model Wizard** window.

2 Click **Next**.

3 In the **Add physics** tree, select **Structural Mechanics>Solid Mechanics (solid)**.

4 Click **Next**.

5 Find the **Studies** subsection. In the tree, select **Preset Studies>Frequency Domain**.

6 Click **Finish**.

GEOMETRY 1

You import the predefined geometry from a file.

Import 1

1 In the **Model Builder** window, under **Model 1** right-click **Geometry 1** and choose **Import**.

2 In the **Import** settings window, locate the **Import** section.

3 Click the **Browse** button.

4 Browse to the model's Model Library folder and double-click the file `viscoelastic_damper.mphbin`.

5 Click the **Import** button.

6 Click the **Go to Default 3D View** button on the Graphics toolbar.

The imported geometry should look similar to that shown in Figure 1.

SOLID MECHANICS

Linear Viscoelastic Material 1

1 In the **Model Builder** window, right-click **Model 1>Solid Mechanics** and choose the domain setting **Linear Viscoelastic Material**.

2 Select Domains 2 and 4 only.

MATERIALS

1 In the **Model Builder** window, under **Model 1** right-click **Materials** and choose **Open Material Browser**.

2 In the **Material Browser** window, locate the **Materials** section.

3 In the tree, select **Built-In>Steel AISI 4340**.

4 Right-click and choose **Add Material to Model** from the menu.

Steel AISI 4340

1 In the **Model Builder** window, under **Model 1>Materials** click **Steel AISI 4340**.

2 Select Domains 1, 3, and 5 only.

Material 2

1 In the **Model Builder** window, right-click **Materials** and choose **Material**.

2 Right-click **Material 2** and choose **Rename**.

3 Go to the **Rename Material** dialog box and type `Viscoelastic` in the **New name** edit field.

4 Click **OK**.

5 Select Domains 2 and 4 only.

6 In the **Material** settings window, locate the **Material Contents** section.

7 In the table, enter the following settings:

PROPERTY	NAME	VALUE
Bulk modulus	K	4e10

 ©2012 COMSOL

PROPERTY	NAME	VALUE
Shear modulus	G	5.86e4
Density	rho	1060

SOLID MECHANICS

Linear Viscoelastic Material 1

Since there are 18 branches in this material model, the data has been collected in a text file which you can load.

1. In the **Model Builder** window, under **Model 1>Solid Mechanics** click **Linear Viscoelastic Material 1**.
2. In the **Linear Viscoelastic Material** settings window, locate the **Generalized Maxwell Model** section.
3. Click **Load from File**.
4. Browse to the model's Model Library folder and double-click the file `viscoelastic_damper_viscoelastic_data.txt`.

Fixed Constraint 1

1. In the **Model Builder** window, right-click **Solid Mechanics** and choose the boundary condition **Fixed Constraint**.
2. Select Boundaries 24–27 only.

Prescribed Displacement 1

1. In the **Model Builder** window, right-click **Solid Mechanics** and choose the boundary condition **Prescribed Displacement**.
2. Select Boundaries 40 and 41 only.
3. In the **Prescribed Displacement** settings window, locate the **Prescribed Displacement** section.
4. Select the **Prescribed in x direction** check box.
5. Select the **Prescribed in y direction** check box.

Boundary Load 1

1. In the **Model Builder** window, right-click **Solid Mechanics** and choose the boundary condition **Boundary Load**.
2. Select Boundaries 40 and 41 only.
3. In the **Boundary Load** settings window, locate the **Force** section.

4 Specify the $\mathbf{F}_A$ vector as

0	x
0	y
8.5e6[Pa]	z

5 Right-click **Model 1>Solid Mechanics>Boundary Load 1** and choose the boundary condition **Phase**.

Phase 1

1 In the **Phase** settings window, locate the **Phase** section.

2 Specify the ϕ vector as

0	x
0	y
pi/2	z

Prescribed Displacement 2

1 In the **Model Builder** window, right-click **Solid Mechanics** and choose the boundary condition **Prescribed Displacement**.

2 Select Boundaries 32 and 33 only.

3 In the **Prescribed Displacement** settings window, locate the **Prescribed Displacement** section.

4 Select the **Prescribed in y direction** check box.

Boundary Load 2

1 In the **Model Builder** window, right-click **Solid Mechanics** and choose the boundary condition **Boundary Load**.

2 Select Boundaries 32 and 33 only.

3 In the **Boundary Load** settings window, locate the **Force** section.

4 Specify the $\mathbf{F}_A$ vector as

5e5[Pa]	x
0	y
8.5e6[Pa]	z

 ©2012 COMSOL

MESH 1

Mesh the side surfaces of the viscoelastic layers and then sweep the resulting mesh into the layers.

Free Triangular 1

1 In the **Model Builder** window, under **Model 1** right-click **Mesh 1** and choose **More Operations>Free Triangular**.

2 Select Boundaries 6 and 20 only.

3 Click the **Build Selected** button.

Swept 1

1 In the **Model Builder** window, right-click **Mesh 1** and choose **Swept**.

2 In the **Swept** settings window, locate the **Domain Selection** section.

3 From the **Geometric entity level** list, choose **Domain**.

4 Select Domains 2 and 4 only.

Distribution 1

1 Right-click **Model 1>Mesh 1>Swept 1** and choose **Distribution**.

2 In the **Distribution** settings window, locate the **Distribution** section.

3 In the **Number of elements** edit field, type 3.

Swept 1

1 In the **Model Builder** window, under **Model 1>Mesh 1** right-click **Swept 1** and choose **Build Selected**.

Mesh the rest of the geometry using a free tetrahedral mesh.

Free Tetrahedral 1

1 Right-click **Mesh 1** and choose **Free Tetrahedral**.

2 In the **Model Builder** window, under **Model 1>Mesh 1** right-click **Free Tetrahedral 1** and choose **Build Selected**.

The complete mesh should look similar to that shown in the figure below.

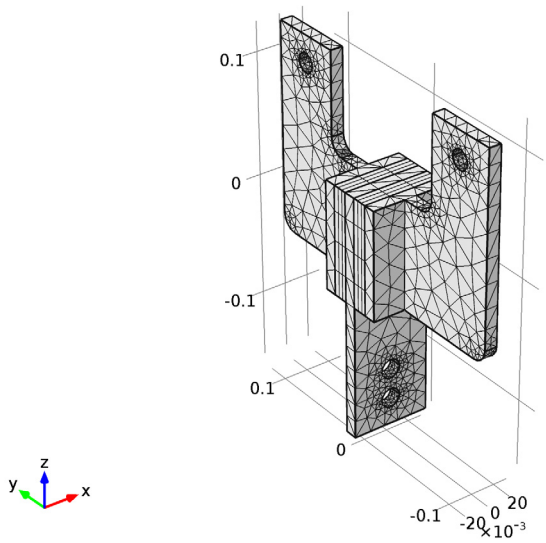

STUDY 1

Step 1: Frequency Domain

1 In the **Model Builder** window, expand the **Study 1** node, then click **Step 1: Frequency Domain**.

2 In the **Frequency Domain** settings window, locate the **Study Settings** section.

3 In the **Frequencies** edit field, type `range(0,0.125,0.5) range(1,0.5,5)`.

4 In the **Model Builder** window, right-click **Study 1** and choose **Show Default Solver**.

RESULTS

Before computing the solution, set up a displacement plot that will be displayed and updated after every frequency response computation.

3D Plot Group 1

1 In the **Model Builder** window, right-click **Results** and choose **3D Plot Group**.

2 Right-click **3D Plot Group 1** and choose **Surface**.

 ©2012 COMSOL

3 In the **Surface** settings window, click **Replace Expression** in the upper-right corner of the **Expression** section. From the menu, choose **Solid Mechanics>Displacement>Displacement field (Material)>Displacement field, Z component (w)**.

4 Right-click **Results>3D Plot Group 1>Surface 1** and choose **Deformation**.

STUDY 1

Step 1: Frequency Domain

1 In the **Model Builder** window, under **Study 1** click **Step 1: Frequency Domain**.

2 In the **Frequency Domain** settings window, click to expand the **Results While Solving** section.

3 Select the **Plot** check box.

Solver 1

1 In the **Model Builder** window, expand the **Study 1>Solver Configurations** node.

2 Right-click **Solver 1** and choose **Compute**.

RESULTS

3D Plot Group 1

1 Click the **Go to Default 3D View** button on the Graphics toolbar.

The computed solution should closely resemble that shown in Figure 2.

To plot the storage and loss moduli, follow these steps:

1D Plot Group 2

1 In the **Model Builder** window, right-click **Results** and choose **1D Plot Group**.

2 In the **1D Plot Group** settings window, locate the **Title** section.

3 From the **Title type** list, choose **Manual**.

4 In the **Title** text area, type `Storage and loss moduli`.

5 Right-click **Results>1D Plot Group 2** and choose **Point Graph**.

6 Select Point 4 only.

7 In the **Point Graph** settings window, locate the **y-Axis Data** section.

8 In the **Expression** edit field, type `solid.Gstor/6.895` .

9 In the **Model Builder** window, right-click **1D Plot Group 2** and choose **Point Graph**.

10 Select Point 4 only.

11 In the **Point Graph** settings window, locate the **y-Axis Data** section.

12 In the **Expression** edit field, type `solid.Gloss/6.895` .

13 Click to expand the **Coloring and Style** section. Find the **Line style** subsection. From the **Line** list, choose **Dashed**.

14 Click the **Plot** button.

 ©2012 COMSOL