Magnetic Brake

This model is licensed under the COMSOL Software License Agreement 6.3.
All trademarks are the property of their respective owners. See www.comsol.com/trademarks.

Introduction

A magnet brake in its simplest form consists of a disc of conductive material and a permanent magnet. The magnet generates a constant magnetic field, in which the disc is rotating. When a conductor moves in a magnetic field it induces currents, and the Lorentz forces from the currents slow the disc.

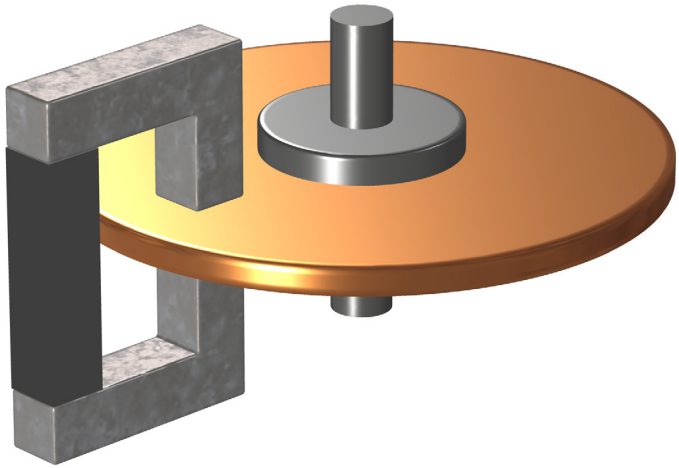

Model Definition

This 3D problem is solved using a time-dependent formulation for the electromagnetic part coupled to an ordinary differential equation for the rotational rigid body dynamics. It also illustrates the proper use of a Lorentz type induced current density term. An ungauged A-V formulation is used to solve the electromagnetic part in a fast and memory efficient way.

For a disc rotating with angular velocity ω about the z-axis, the velocity $\mathbf{v}$ at a point (x, y) is given by

$$\mathbf{v} = \omega(-y, x, 0)$$

Maxwell-Ampère's law, expressed using a magnetic vector potential $\mathbf{A}$, a scalar electric potential V, and an induced current density term of Lorentz type is the fundamental field

equation used in this model. It is complemented by a current balance but no explicit gauge is provided.

$$\nabla \times (\mu^{-1}\nabla \times \mathbf{A}) - \sigma \mathbf{v} \times (\nabla \times \mathbf{A}) + \sigma \nabla V = 0$$
$$-\nabla \cdot (-\sigma \mathbf{v} \times (\nabla \times \mathbf{A}) + \sigma \nabla V) = 0$$

Such a formulation is inherently singular because the divergence of the magnetic vector potential is not uniquely determined and there is an infinite number of possible solutions to the problem. All such solutions, however, yield the same magnetic flux and current densities. It is further known that the above formulation, when solved using an iterative solver, converges quickly and robustly provided that any explicitly supplied source current density (in this case, zero) is divergence free and no direct coarse grid solver is involved in the solution scheme.

The induced Lorentz current density term is a common source of confusion in electromagnetic modeling. In situations when the moving domain is of bounded extent in the direction of the motion or varies in this direction or contains magnetic sources that also move, Lorentz terms cannot be used. This is because the part of the magnetic flux generated by moving sources must not be included in the Lorentz term. In this situation, the induced current distribution is stationary (it stays where the magnet is and does not move with the spinning disc). Thus, the moving domain does not contain any magnetic sources that move along with it and it is unbounded and invariant in the direction of the motion.

The magnetic and electric boundary conditions on external boundaries are

$$\mathbf{n} \times \mathbf{A} = 0, \qquad V = 0$$

Now consider how the system evolves over time. The induced torque slows the disc down, described by an ordinary differential equation (ODE) for the angular velocity ω.

$$\frac{d\omega}{dt} = \frac{T_z}{I}$$

Where the torque T_z is obtained as the z component of the vector

$$\mathbf{T} = \int_{\text{disk}} \mathbf{r} \times (\mathbf{J} \times \mathbf{B}) dV$$

and the moment of inertia I for a disc with radius r and unit thickness equals

$$I = m\frac{r^2}{2} = \frac{\rho r^4 \pi}{2}$$

Here m is the disc mass and ρ is the density.

Results and Discussion

The COMSOL Multiphysics model is set up for a 1 cm thick copper disc with a radius of 10 cm and an initial angular speed of 1000 rpm. The magnet consists of a 1 T, hard ($\mu_r = 1$) permanent magnet connected to an iron yoke with a 1.5 cm air gap in which the copper disc spins. The figures below show the induced eddy current density and the time evolution of the angular velocity, braking torque and dissipated power respectively.

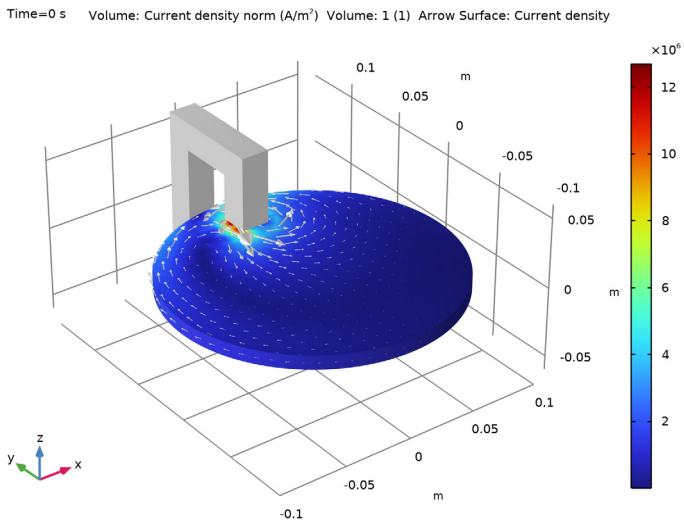

Figure 1: The eddy current magnitude and direction at t = 0 s.

.

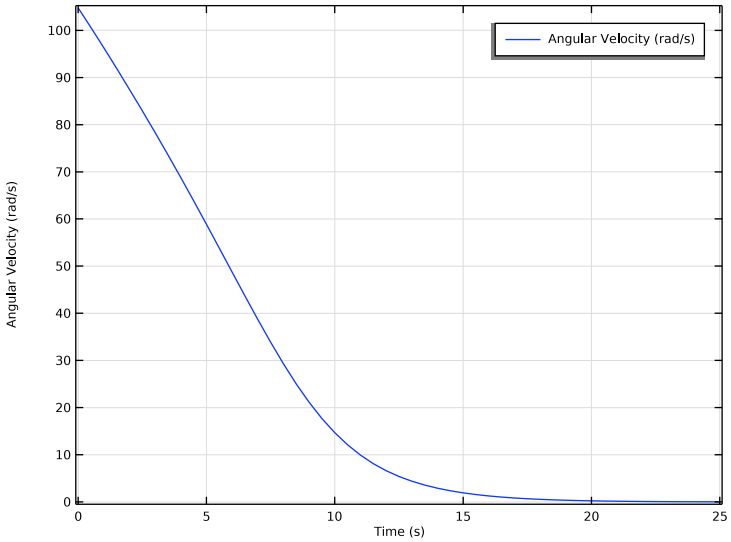

Figure 2: The time evolution of the angular velocity.

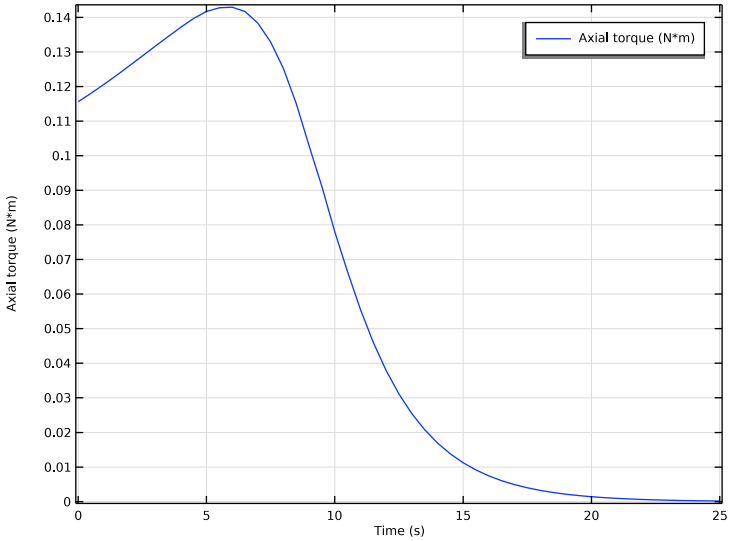

Figure 3: The time evolution of the braking torque.

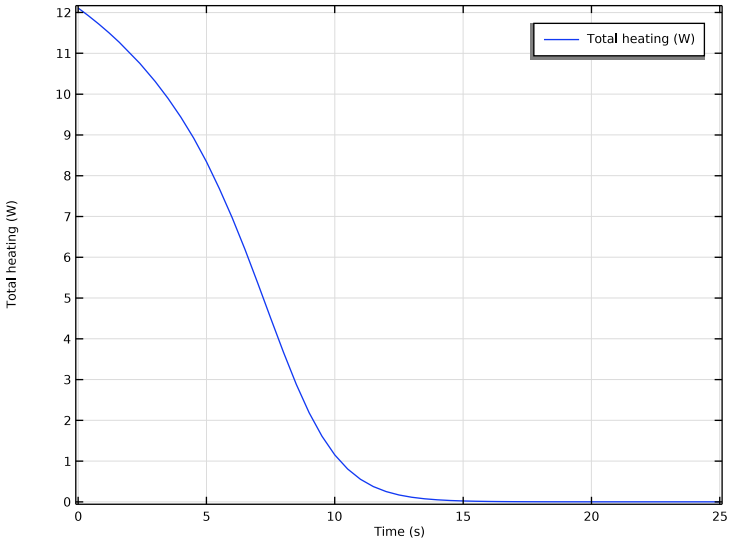

Figure 4: The time evolution of the dissipated power.

Application Library path: `ACDC_Module/Devices,_Transducers_and_Actuators/magnetic_brake`

Modeling Instructions

From the **File** menu, choose **New**.

NEW

In the **New** window, click **Model Wizard**.

MODEL WIZARD

1 In the **Model Wizard** window, click **3D**.

2 In the **Select Physics** tree, select **AC/DC** > **Electromagnetic Fields** > **Vector Formulations** > **Magnetic and Electric Fields (mef)**.

3 Click **Add**.

4 In the **Select Physics** tree, select **Mathematics** > **ODE and DAE Interfaces** > **Global ODEs and DAEs (ge)**.

5 Click **Add**.

6 Click **Study**.

7 In the **Select Study** tree, select **General Studies** > **Stationary**.

8 Click **Done**.

GLOBAL DEFINITIONS

Parameters 1

1 In the **Model Builder** window, under **Global Definitions** click **Parameters 1**.

2 In the **Settings** window for **Parameters**, locate the **Parameters** section.

3 In the table, enter the following settings:

Name	Expression	Value	Description
dt	1[cm]	0.01 m	Disc thickness
dr	10[cm]	0.1 m	Disc radius
mh	12[cm]	0.12 m	Magnet height
mw	2[cm]	0.02 m	Magnet width
ml	8[cm]	0.08 m	Magnet length
mt	2[cm]	0.02 m	Magnet thickness
mg	1.5[cm]	0.015 m	Magnet air gap
mB	1[T]	1 T	Magnet flux
ymur	4000	4000	Yoke relative permeability
dV0	1000[rpm]	16.667 1/s	Disc initial angular frequency

GEOMETRY 1

Sphere 1 (sph1)

1 In the **Geometry** toolbar, click **Sphere**.

2 In the **Settings** window for **Sphere**, locate the **Size** section.

3 In the **Radius** text field, type `dr*3`.

Disc

1 In the **Geometry** toolbar, click **Cylinder**.

2 In the **Settings** window for **Cylinder**, type `Disc` in the **Label** text field.

3 Locate the **Size and Shape** section. In the **Radius** text field, type `dr`.

4 In the **Height** text field, type `dt`.

5 Locate the **Position** section. In the **z** text field, type `-dt/2`.

6 Locate the **Selections of Resulting Entities** section. Select the **Resulting objects selection** checkbox.

A selection named **Disc** is then automatically created for the disc.

Now, design the magnet and the yoke on a plane, and then extrude them.

Work Plane 1 (wp1)

1 In the **Geometry** toolbar, click **Work Plane**.

2 In the **Settings** window for **Work Plane**, locate the **Plane Definition** section.

3 From the **Plane** list, choose **yz-plane**.

4 In the **x-coordinate** text field, type `-mt/2`.

5 Click **Go to Plane Geometry**.

Work Plane 1 (wp1) > Rectangle 1 (r1)

1 In the **Work Plane** toolbar, click **Rectangle**.

2 In the **Settings** window for **Rectangle**, locate the **Size and Shape** section.

3 In the **Width** text field, type `mw`.

4 In the **Height** text field, type `mh-2*mw`.

5 Locate the **Position** section. From the **Base** list, choose **Center**.

6 In the **xw** text field, type `dr+ml/2-mw/2`.

Work Plane 1 (wp1) > Rectangle 2 (r2)

1 In the **Work Plane** toolbar, click **Rectangle**.

2 In the **Settings** window for **Rectangle**, locate the **Size and Shape** section.

3 In the **Width** text field, type `ml-mw`.

4 In the **Height** text field, type `mw`.

5 Locate the **Position** section. In the **xw** text field, type `dr-ml/2+mw`.

6 In the **yw** text field, type `mh/2-mw`.

Work Plane 1 (wp1) > Rectangle 3 (r3)

1 In the **Work Plane** toolbar, click **Rectangle**.

2 In the **Settings** window for **Rectangle**, locate the **Size and Shape** section.

3 In the **Width** text field, type `mw`.

4 In the **Height** text field, type `mh/2-mg/2`.

5 Locate the **Position** section. In the **xw** text field, type `dr-ml/2`.

6 In the **yw** text field, type `mg/2`.

Work Plane 1 (wp1) > Mirror 1 (mir1)

1 In the **Work Plane** toolbar, click **Transforms** and choose **Mirror**.

2 Click the **Zoom Extents** button in the **Graphics** toolbar.

3 Select the objects **r2** and **r3** only.

4 In the **Settings** window for **Mirror**, locate the **Input** section.

5 Select the **Keep input objects** checkbox.

6 Locate the **Normal Vector to Line of Reflection** section. In the **xw** text field, type `0`.

7 In the **yw** text field, type `1`.

8 Right-click **Mirror 1 (mir1)** and choose **Build Selected**.

The geometry on the work plane should now look like the figure below.

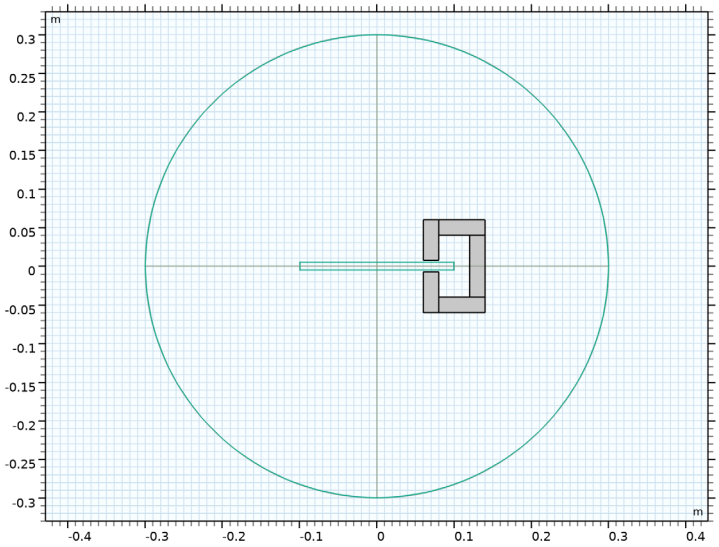

Extrude 1 (ext1)

1 In the **Model Builder** window, right-click **Geometry 1** and choose **Extrude**.

2 In the **Settings** window for **Extrude**, locate the **Distances** section.

3 In the table, enter the following settings:

Distances (m)
`mt`

4 Click **Build All Objects**.

Hide the exterior boundaries to show the yoke and the disc only.

5 Click the **Click and Hide** button in the **Graphics** toolbar.

6 In the **Graphics** window toolbar, click ▾ next to **Select Objects**, then choose **Select Boundaries**.

7 Select the exterior boundaries of the sphere (Boundaries 1–8 on the object `sph1`).

8 Click the **Click and Hide** button in the **Graphics** toolbar.

9 Click the **Go to Default View** button in the **Graphics** toolbar.

The model geometry is now complete.

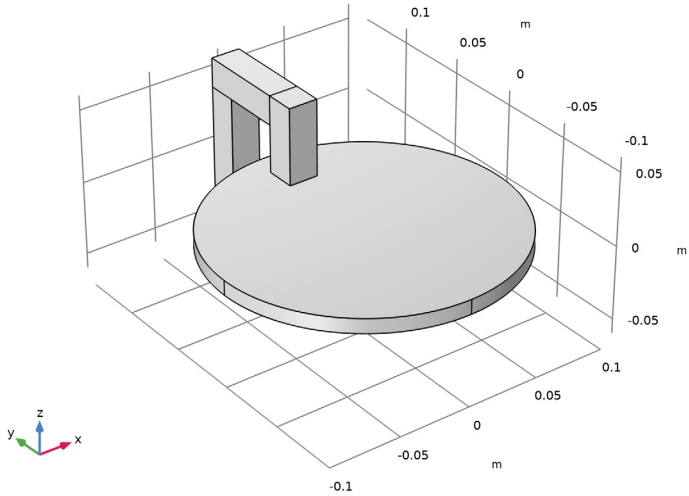

Define a nonlocal integration coupling on the disc to compute the total dissipated power.

DEFINITIONS

Integration over Disc

1 In the **Definitions** toolbar, click **Nonlocal Couplings** and choose **Integration**.

2 In the **Settings** window for **Integration**, type `intdisc` in the **Operator name** text field.

3 Select Domain 2 only.

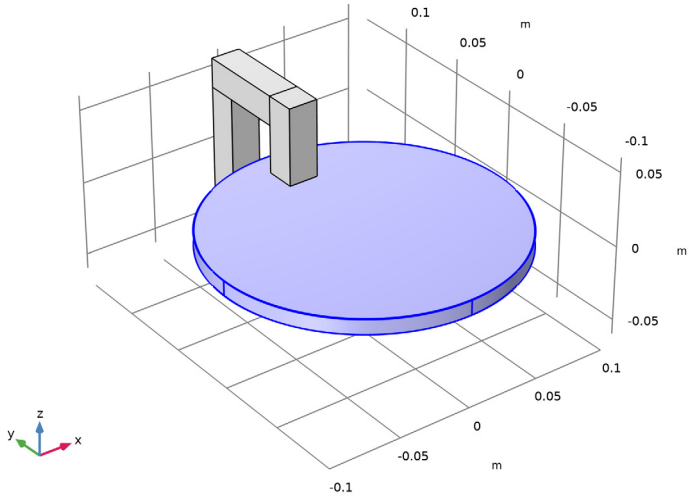

4 In the **Label** text field, type `Integration over Disc`.

Mass Properties 1 (mass1)

1 In the **Model Builder** window, right-click **Definitions** and choose **Physics Utilities** > **Mass Properties**.

2 In the **Settings** window for **Mass Properties**, locate the **Source Selection** section.

3 Click **Clear Selection**.

4 From the **Selection** list, choose **Disc**.

5 Locate the **Variables** section. From the **Frame** list, choose **Spatial (x, y, z)**.

Use the density of the material (in this case, copper) to compute the moment of inertia.

6 Locate the **Density** section. In the **Density expression** text field, type `mat1.def.rho`.

7 Clear all checkboxes except **Create moment of inertia variables**.

The **Mass Properties** node will define the moment of inertia variables `mass1.Ixx`, `mass1.Ixy`, and so on.

MAGNETIC AND ELECTRIC FIELDS (MEF)

Ampère's Law and Current Conservation in Solids 1

1 In the **Physics** toolbar, click **Domains** and choose **Ampère's Law and Current Conservation in Solids**.

2 Select Domains 3–6 only.

Permanent Magnet

1 In the **Physics** toolbar, click **Domains** and choose **Ampère's Law and Current Conservation in Solids**.

2 Select Domain 7 only.

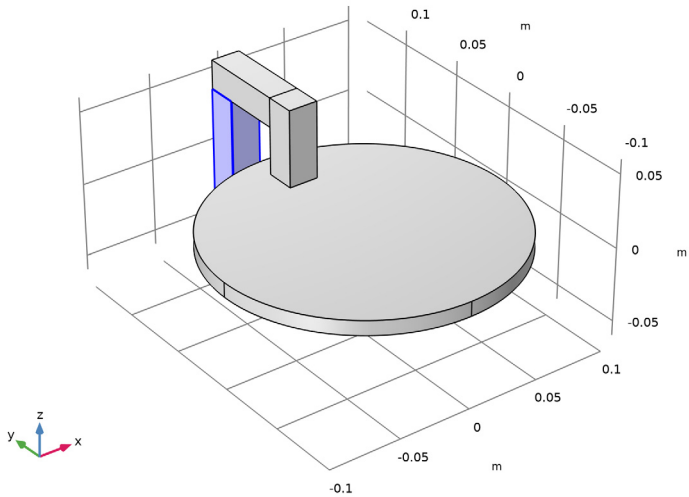

3 In the **Settings** window for **Ampère's Law and Current Conservation in Solids**, locate the **Constitutive Relation B-H** section.

4 From the **Magnetization model** list, choose **Remanent flux density**.

5 Specify the **e** vector as

0	x
0	y
1	z

6 In the **Label** text field, type `Permanent Magnet`.

Disc

1 In the **Physics** toolbar, click **Domains** and choose **Ampère's Law and Current Conservation in Solids**.

2 In the **Settings** window for **Ampère's Law and Current Conservation in Solids**, locate the **Domain Selection** section.

3 From the **Selection** list, choose **Disc**.

4 In the **Label** text field, type `Disc`.

Velocity (Lorentz Term) 1

1 In the **Physics** toolbar, click **Domains** and choose **Velocity (Lorentz Term)**.

2 In the **Settings** window for **Velocity (Lorentz Term)**, locate the **Domain Selection** section.

3 From the **Selection** list, choose **Disc**.

4 Locate the **Velocity (Lorentz Term)** section. Specify the **v** vector as

`-y*W`	x
`x*W`	y
`0`	z

Specifying the variable `W` as angular velocity (that will be used later as a state variable in the ODE) couples the **Magnetic and Electric Fields** interface with the ODE.

ADD MATERIAL

1 In the **Materials** toolbar, click **Add Material** to open the **Add Material** window.

2 Go to the **Add Material** window.

3 In the tree, select **Built-in** > **Copper**.

4 Click the **Add to Component** button in the window toolbar.

5 In the **Materials** toolbar, click **Add Material** to close the **Add Material** window.

MATERIALS

Copper (mat1)

1 In the **Settings** window for **Material**, locate the **Geometric Entity Selection** section.

2 From the **Selection** list, choose **Disc**.

Yoke

1 In the **Model Builder** window, right-click **Materials** and choose **Blank Material**.

2 Select Domains 3–6 only.

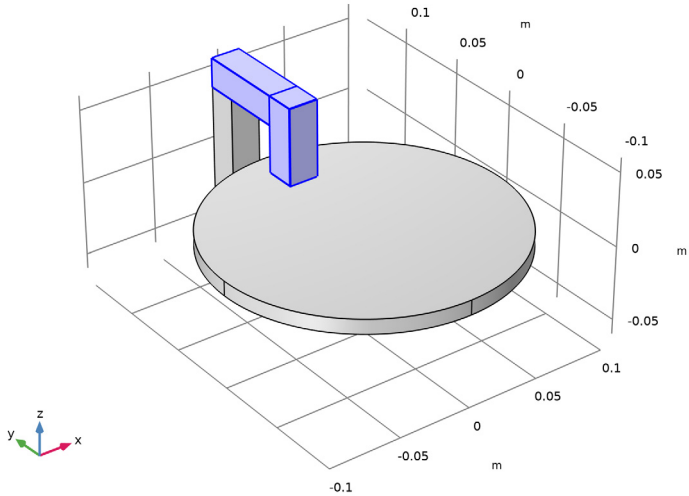

3 In the **Settings** window for **Material**, locate the **Material Contents** section.

4 In the table, enter the following settings:

Property	Variable	Value	Unit	Property group
Relative permeability	mur_iso ; murii = mur_iso, murij = 0	ymur	1	Basic
Electric conductivity	sigma_iso ; sigmaii = sigma_iso, sigmaij = 0	1	S/m	Basic
Relative permittivity	epsilonr_iso ; epsilonrii = epsilonr_iso, epsilonrij = 0	1	1	Basic

5 In the **Label** text field, type `Yoke`.

ADD MATERIAL

1 In the **Materials** toolbar, click **Add Material** to open the **Add Material** window.

2 Go to the **Add Material** window.

3 In the tree, select **AC/DC** > **Hard Magnetic Materials** > **Sintered NdFeB Grades (Chinese Standard)** > **N50 (Sintered NdFeB)**.

4 Right-click and choose **Add to Component 1 (comp1)**.

5 In the **Materials** toolbar, click **Add Material** to close the **Add Material** window.

MATERIALS

Generic Magnet

1 Select Domain 7 only.

2 In the **Settings** window for **Material**, locate the **Material Contents** section.

3 In the table, enter the following settings:

Property	Variable	Value	Unit	Property group
Electric conductivity	sigma_iso ; sigmaii = sigma_iso, sigmaij = 0	1	S/m	Basic
Recoil permeability	murec_iso ; murecii = murec_iso, murecij = 0	1	1	Remanent flux density
Remanent flux density norm	normBr	mB	T	Remanent flux density

4 In the **Label** text field, type `Generic Magnet`.

GLOBAL ODES AND DAES (GE)

Add a **Mass Properties** node to compute the moment of inertia of the disc.

Global Equations 1 (ODE1)

1 In the **Model Builder** window, under **Component 1 (comp1)** > **Global ODEs and DAEs (ge)** click **Global Equations 1 (ODE1)**.

2 In the **Settings** window for **Global Equations**, locate the **Global Equations** section.

3 Specify the differential equation that describes the dynamics of the disc in the table. Torque is computed by integrating the Lorentz force contribution.

Name	f(u,ut,utt,t) (1)	Initial value (u_0) (1)	Description
W	Wt-intdisc(x*mef.FLtzy-y*mef.FLtzx)/mass1.Izz	2*pi*dV0	Angular Velocity

4 Locate the **Units** section. Click **Select Dependent Variable Quantity**.

5 In the **Physical Quantity** dialog, type angularfrequency in the text field.

6 In the tree, select **General** > **Angular frequency (rad/s)**.

7 Click **OK**.

8 In the **Settings** window for **Global Equations**, locate the **Units** section.

9 Click **Select Source Term Quantity**.

10 In the **Physical Quantity** dialog, type angularacceleration in the text field.

11 In the tree, select **General** > **Angular acceleration (rad/s^2)**.

12 Click **OK**.

This is the differential equation that describes the dynamics of the disc.

DEFINITIONS

Variables 1

1 In the **Model Builder** window, under **Component 1 (comp1)** right-click **Definitions** and choose **Variables**.

2 In the **Settings** window for **Variables**, locate the **Variables** section.

3 In the table, enter the following settings:

Name	Expression	Unit	Description
axialTorque	-intdisc(x*mef.FLtzy-y*mef.FLtzx)	N·m	Axial torque
totalHeating	intdisc(mef.Qh)	W	Total heating

Global Variable Probe 1 (var1)

1 In the **Definitions** toolbar, click **Probes** and choose **Global Variable Probe**.

2 In the **Settings** window for **Global Variable Probe**, click to expand the **Table and Window Settings** section.

3 From the **Plot window** list, choose **New window**.

Global Variable Probe 2 (var2)

1 In the **Definitions** toolbar, click **Probes** and choose **Global Variable Probe**.

2 In the **Settings** window for **Global Variable Probe**, click **Replace Expression** in the upper-right corner of the **Expression** section. From the menu, choose **Component 1 (comp1)** > **Definitions** > **Variables** > **axialTorque - Axial torque - N·m**.

3 Locate the **Table and Window Settings** section. From the **Plot window** list, choose **New window**.

Global Variable Probe 3 (var3)

1 In the **Definitions** toolbar, click **Probes** and choose **Global Variable Probe**.

2 In the **Settings** window for **Global Variable Probe**, click **Replace Expression** in the upper-right corner of the **Expression** section. From the menu, choose **Component 1 (comp1)** > **Definitions** > **Variables** > **totalHeating - Total heating - W**.

3 Locate the **Table and Window Settings** section. From the **Plot window** list, choose **New window**.

MESH 1

Size 1

In the **Model Builder** window, under **Component 1 (comp1)** right-click **Mesh 1** and choose **Size**.

Size

1 In the **Settings** window for **Size**, locate the **Element Size** section.

2 From the **Predefined** list, choose **Coarser**.

Size 1

1 In the **Model Builder** window, click **Size 1**.

2 In the **Settings** window for **Size**, locate the **Element Size** section.

3 From the **Predefined** list, choose **Extremely fine**.

4 Locate the **Geometric Entity Selection** section. From the **Geometric entity level** list, choose **Domain**.

5 Select Domains 2–4 only.

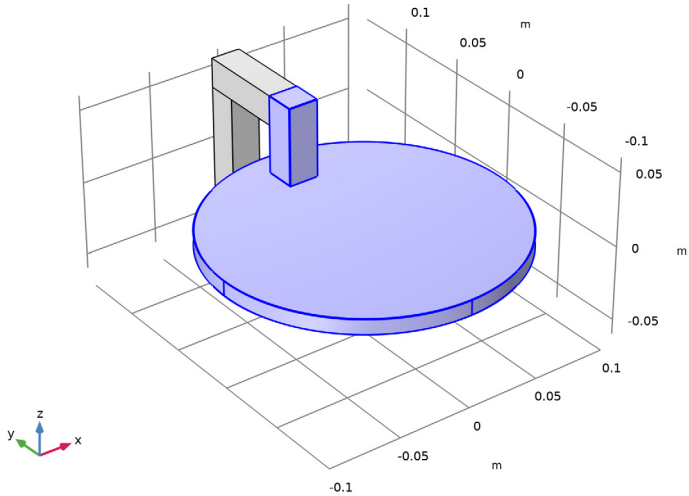

Free Tetrahedral 1

1 In the **Mesh** toolbar, click **Free Tetrahedral**.

2 In the **Settings** window for **Free Tetrahedral**, click to expand the **Scale Geometry** section.

3 In the **z-direction scale** text field, type `1.1`.

4 Click **Build All**.

STUDY 1

Step 1: Stationary

The stationary solver will compute initial values for the time dependent solver.

1 In the **Model Builder** window, under **Study 1** click **Step 1: Stationary**.

2 In the **Settings** window for **Stationary**, locate the **Physics and Variables Selection** section.

3 In the **Solve for** column of the table, under **Component 1 (comp1)**, clear the checkbox for **Global ODEs and DAEs (ge)**.

Step 2: Time Dependent

1 In the **Study** toolbar, click **Study Steps** and choose **Time Dependent** > **Time Dependent**.

2 In the **Settings** window for **Time Dependent**, locate the **Study Settings** section.

3 In the **Output times** text field, type `range(0,0.5,25)`.

4 In the **Model Builder** window, click **Study 1**.

5 In the **Settings** window for **Study**, locate the **Study Settings** section.

6 Clear the **Generate default plots** checkbox.

Solution 1 (sol1)

1 In the **Study** toolbar, click **Show Default Solver**.

For a time-dependent problem, the default error estimate will be too conservative and may result in stagnation of the iterative solver. To overcome this, solver tolerances are tuned.

2 In the **Model Builder** window, expand the **Solution 1 (sol1)** node, then click **Time-Dependent Solver 1**.

3 In the **Settings** window for **Time-Dependent Solver**, click to expand the **Absolute Tolerance** section.

4 In the **Variables** list, select **Global Equations 1 (comp1.ODE1)**.

5 From the **Method** list, choose **Unscaled**.

6 From the **Tolerance method** list, choose **Manual**.

7 In the **Tolerance** text field, type `0.1`.

8 Click to expand the **Time Stepping** section. From the **Steps taken by solver** list, choose **Intermediate**.

9 In the **Model Builder** window, expand the **Study 1** > **Solver Configurations** > **Solution 1 (sol1)** > **Time-Dependent Solver 1** node, then click **Iterative 1**.

10 In the **Settings** window for **Iterative**, click to expand the **Error** section.

11 In the **Factor in error estimate** text field, type `1`.

12 In the **Study** toolbar, click **Compute**.

RESULTS

During the computation, the angular velocity as a function of time has been plotted together with torque and dissipated power. Give a proper label and compare with those reported in documentation.

Angular Velocity vs. Time

1 In the **Model Builder** window, under **Results** click **Probe Plot Group 1**.

2 In the **Settings** window for **1D Plot Group**, type `Angular Velocity vs. Time` in the **Label** text field.

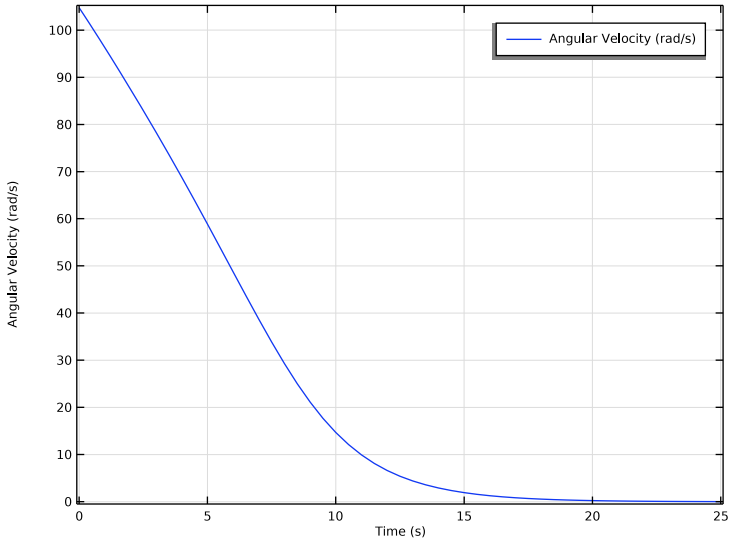

Axial Torque vs. Time

1 In the **Model Builder** window, under **Results** click **Probe Plot Group 2**.

2 In the **Settings** window for **1D Plot Group**, type `Axial Torque vs. Time` in the **Label** text field.

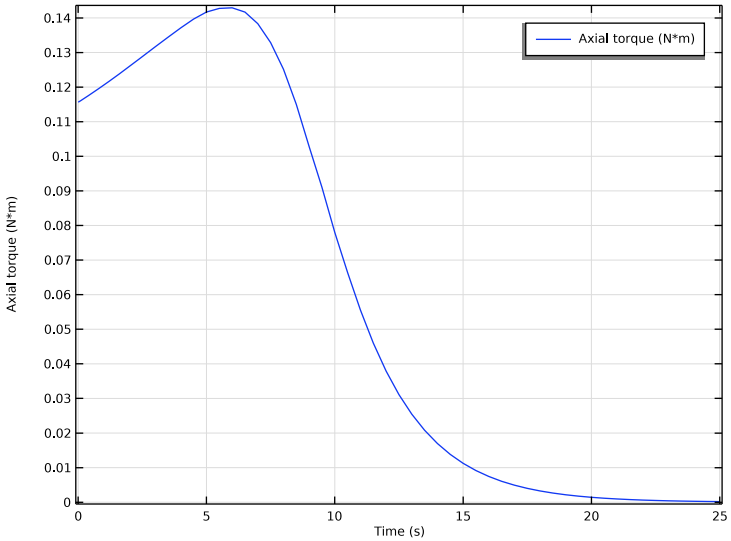

Total Heating vs. Time

1 In the **Model Builder** window, under **Results** click **Probe Plot Group 3**.

2 In the **Settings** window for **1D Plot Group**, type `Total Heating vs. Time` in the **Label** text field.

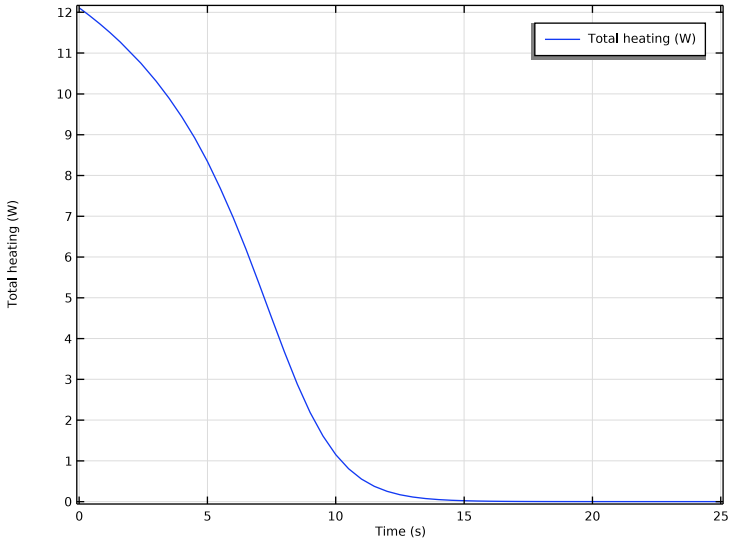

3D Plot Group 4

1 In the **Results** toolbar, click **3D Plot Group**.

2 In the **Settings** window for **3D Plot Group**, locate the **Plot Settings** section.

3 Clear the **Plot dataset edges** checkbox.

Volume 1

1 Right-click **3D Plot Group 4** and choose **Volume**.

2 In the **Settings** window for **Volume**, click **Replace Expression** in the upper-right corner of the **Expression** section. From the menu, choose **Component 1 (comp1)** > **Magnetic and Electric Fields** > **Currents and charge** > **mef.normJ - Current density norm - A/m²**.

Selection 1

1 Right-click **Volume 1** and choose **Selection**.

2 Select Domain 2 only.

Volume 2

1 In the **Model Builder** window, right-click **3D Plot Group 4** and choose **Volume**.

2 In the **Settings** window for **Volume**, locate the **Expression** section.

3 In the **Expression** text field, type `1`.

4 Locate the **Coloring and Style** section. From the **Coloring** list, choose **Uniform**.

5 From the **Color** list, choose **Gray**.

Selection 1

1 Right-click **Volume 2** and choose **Selection**.

2 Select Domains 3–7 only.

Arrow Surface 1

1 In the **Model Builder** window, right-click **3D Plot Group 4** and choose **Arrow Surface**.

2 In the **Settings** window for **Arrow Surface**, click **Replace Expression** in the upper-right corner of the **Expression** section. From the menu, choose **Component 1 (comp1)** > **Magnetic and Electric Fields** > **Currents and charge** > **mef.Jx,mef.Jy,mef.Jz - Current density**.

3 Locate the **Arrow Positioning** section. In the **Number of arrows** text field, type 1000.

4 Locate the **Coloring and Style** section. From the **Color** list, choose **White**.

3D Plot Group 4

1 In the **Model Builder** window, click **3D Plot Group 4**.

2 In the **Settings** window for **3D Plot Group**, locate the **Data** section.

3 From the **Time (s)** list, choose **0**.

4 In the **3D Plot Group 4** toolbar, click **Plot**.

5 Click the **Zoom Extents** button in the **Graphics** toolbar.

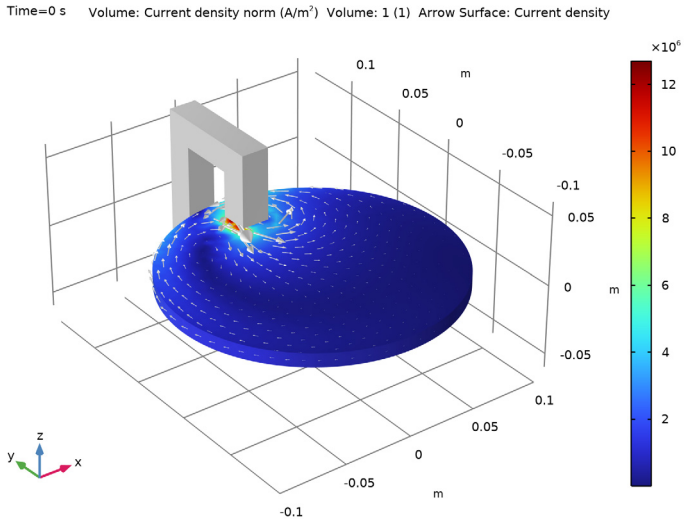

The plot shows the current density on the surface of the disc at $t = 0$ (when the disc is still spinning).

6 From the **Time (s)** list, choose **25**.

7 In the **3D Plot Group 4** toolbar, click **Plot**.

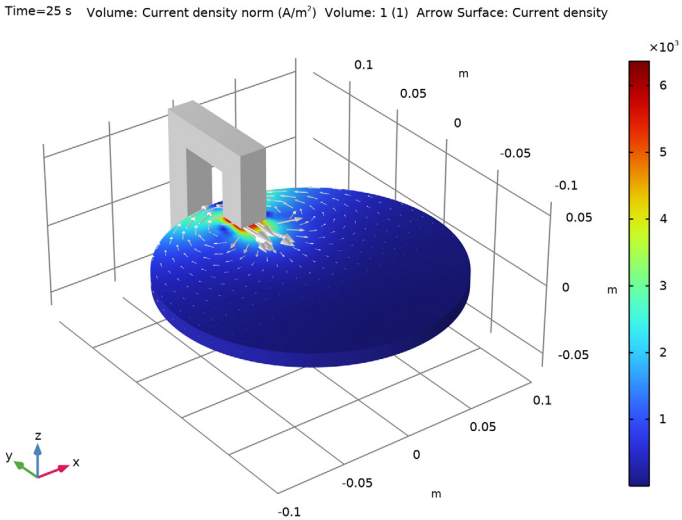

Now, the plot shows the current density when the disc has almost stopped.