# SMA Connectorized Wilkinson Power Divider

## *Introduction*

Resistive power dividers and T-junction power dividers are two conventional types of three-port power dividers. Such dividers are either lossy or not matched to the system reference impedance at all ports. In addition, isolation between two coupled ports is not guaranteed. The Wilkinson power divider outperforms both the lossless T-junction divider and the resistive divider and does not have the issues mentioned above. This example shows how to model such a device.

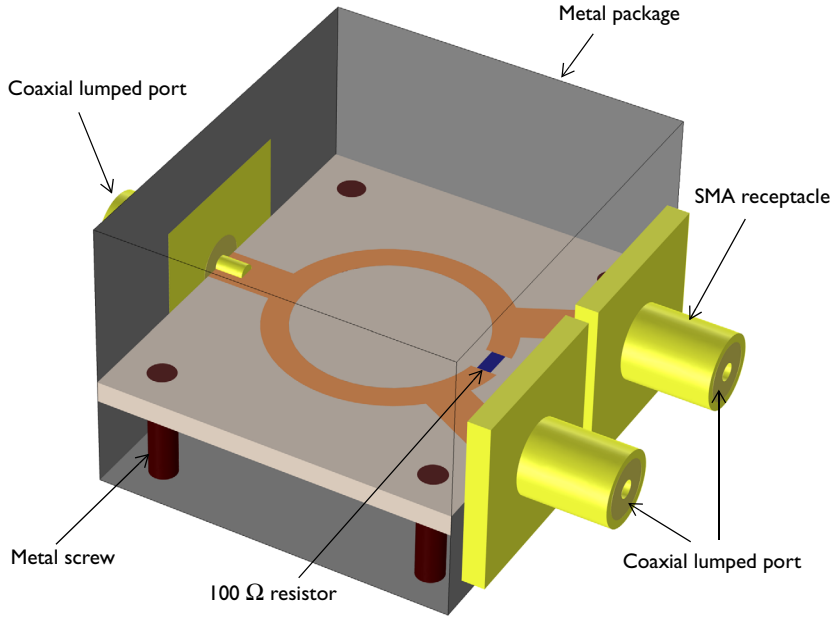


*Figure 1: A Wilkinson power divider is fabricated on a 60 mil substrate. An SMA receptacle is added on each port and the circuit board is suspended in the metal package using screws.*

## *Model Definition*

The Wilkinson power divider is a three-port device composed of 50 Ω and 70.7 Ω microstrip lines on a dielectric substrate with a ground plane and a 100 Ω resistor mounted between two ports. The model also includes a metal enclosure, screws, and SMA receptacles connected to each port representing a complete package of a power divider shown in Figure 1. Model all microstrip lines, the SMA receptacles, screws, and the metal package using perfect electric conductor (PEC) boundaries. The SMA receptacle and screw domains enclosed by these PEC boundaries are not part of the model analysis. The relative dielectric constant, $\varepsilon_r$, of the 60 mil substrate is 3.38. The boundaries facing the dielectric-filled coaxial connector of the SMA receptacles are specified as coaxial lumped ports. The 100 Ω resistor is realized via a uniform lumped port with100 Ω characteristic impedance.

## *Results and Discussion*

Figure 2 shows the symmetric E-field norm distribution on the top of the substrate. The input energy is equally coupled to each output port.

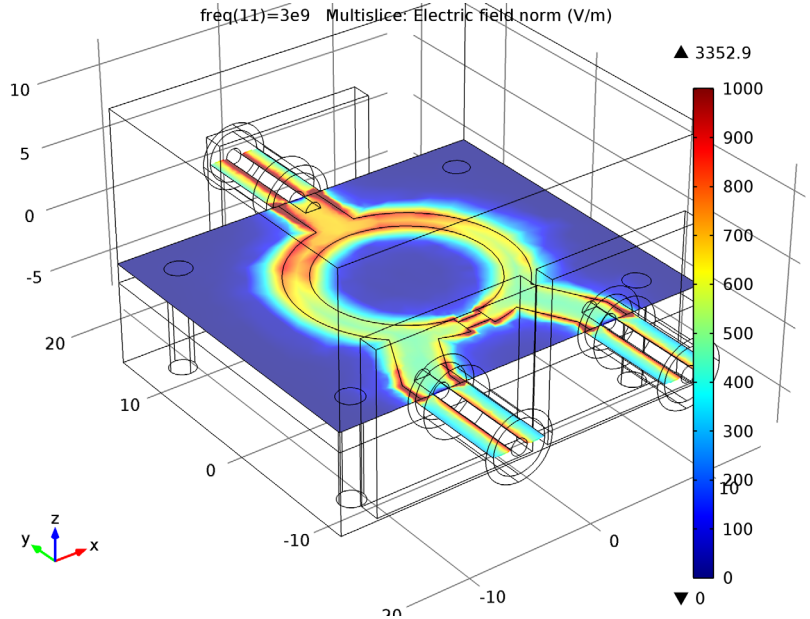


*Figure 2: The E-field norm plot shows that the input is evenly split between the two output ports.*

The S-parameters plotted in Figure 3 show the frequency response of the Wilkinson power divider. Good input impedance matching characteristics are observed and the coupled power at each output port is about –3 dB around 3 GHz.

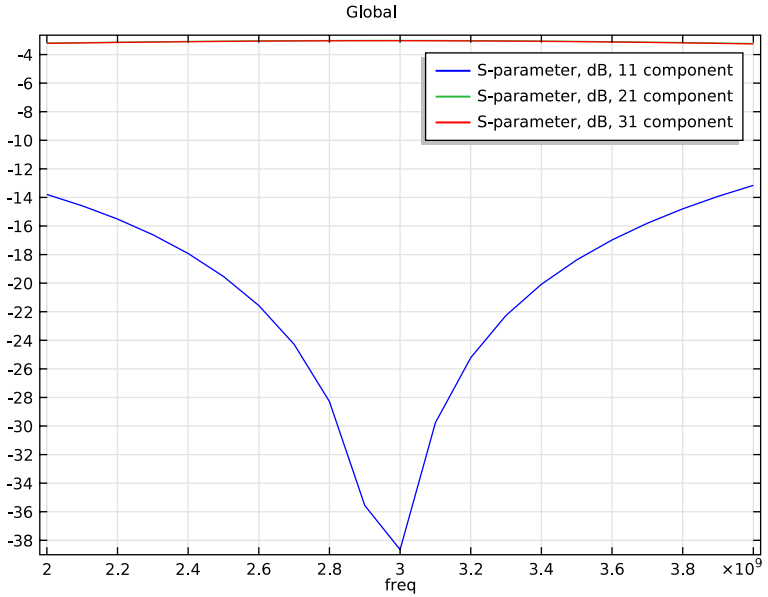


*Figure 3: The S-parameters show very good input matching at 3 GHz and evenly divided power at the two output ports.*

## *References*

1. D.M. Pozar, *Microwave Engineering*, John Wiley & Sons, 1998.

2. R.E. Collin, *Foundation of Microwave Engineering*, McGraw-Hill, 1992.

**Model Library path:** `RF_Module/Passive_Devices/wilkinson_power_divider`

## *Modeling Instructions*

From the **File** menu, choose **New**.

### NEW

1 In the **New** window, click the **Model Wizard** button.

### MODEL WIZARD

1 In the **Model Wizard** window, click the **3D** button.

2 In the **Select physics** tree, select **Radio Frequency>Electromagnetic Waves, Frequency Domain (emw)**.

3 Click the **Add** button.

4 Click the **Study** button.

5 In the tree, select **Preset Studies>Frequency Domain**.

6 Click the **Done** button.

### GLOBAL DEFINITIONS

*Parameters*

1 On the **Home** toolbar, click **Parameters**.

2 In the **Parameters** settings window, locate the **Parameters** section.

3 In the table, enter the following settings:

| Name | Expression | Value | Description |
|---|---|---|---|
| r_ring | 8.5[mm] | 0.0085000 m | Radius, microstrip line ring |
| w_subs | 30[mm] | 0.030000 m | Width, substrate |
| l_subs | 26[mm] | 0.026000 m | Length, susbtrate |
| r_inner | 0.635[mm] | 6.3500E-4 m | Radius, coax inner |
| r_outer | 2.05[mm] | 0.0020500 m | Radius, coax outer |
| l_sma | 8[mm] | 0.0080000 m | Length, SMA |
| f_min | 2[GHz] | 2.0000E9 Hz | Minimum frequency in sweep |
| f_max | 4[GHz] | 4.0000E9 Hz | Maximum frequency in sweep |
| lda0 | c_const/f_max | 0.074948 m | Wavelength, air |
| h_max | 0.2*lda0 | 0.014990 m | Maximum mesh size, air |

Here, `c_const` is a predefined COMSOL constant for the speed of light in vacuum.

### GEOMETRY 1

1 In the **Model Builder** window, under **Component 1** click **Geometry 1**.

2 In the **Geometry** settings window, locate the **Units** section.

3 From the **Length unit** list, choose **mm**.

First, create the substrate.

*Block 1*

1 On the **Geometry** toolbar, click **Block**.

2 In the **Block** settings window, locate the **Size** section.

3 In the **Width** edit field, type `w_subs`.

4 In the **Depth** edit field, type `l_subs`.

5 In the **Height** edit field, type `1.524`.

6 Locate the **Position** section. From the **Base** list, choose **Center**.

7 In the **z** edit field, type `-0.762`.

8 Right-click **Component 1>Geometry 1>Block 1** and choose **Rename**.

9 Go to the **Rename Block** dialog box and type `Substrate` in the **New name** edit field.

10 Click **OK**.

Add a block for the metal package.

*Block 2*

1 On the **Geometry** toolbar, click **Block**.

2 In the **Block** settings window, locate the **Size** section.

3 In the **Width** edit field, type `w_subs`.

4 In the **Depth** edit field, type `l_subs`.

5 In the **Height** edit field, type `20`.

6 Locate the **Position** section. From the **Base** list, choose **Center**.

7 In the **z** edit field, type `2`.

8 Click the **Build Selected** button.

**9** Click the **Wireframe Rendering** button on the Graphics toolbar.

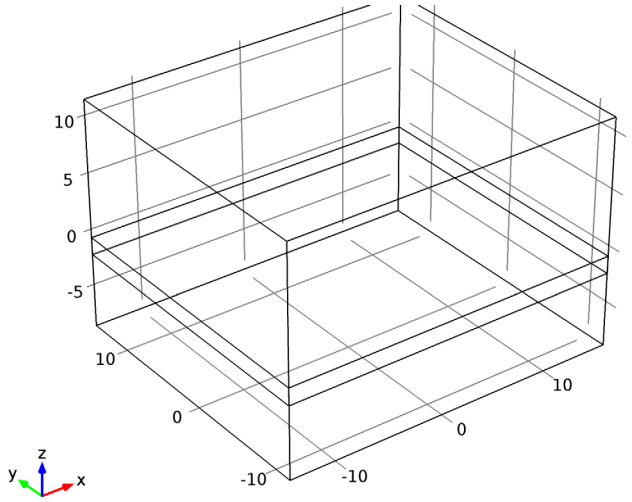


**10** Right-click **Component 1>Geometry 1>Block 2** and choose **Rename**.

**11** Go to the **Rename Block** dialog box and type `Package` in the **New name** edit field.

**12** Click **OK**.

Add a work plane for drawing the layout of the power divider.

**1** On the **Geometry** toolbar, click **Work Plane**.

*Plane Geometry*

Add two circles to create the ring strip part.

*Circle 1*

**1** In the **Model Builder** window, under **Component 1>Geometry 1>Work Plane 1** right-click **Plane Geometry** and choose **Circle**.

**2** Click the **Zoom Extents** button on the Graphics toolbar.

**3** In the **Circle** settings window, locate the **Size and Shape** section.

**4** In the **Radius** edit field, type `r_ring`.

**5** Right-click **Component 1>Geometry 1>Work Plane 1>Plane Geometry>Circle 1** and choose **Rename**.

**6** Go to the **Rename Circle** dialog box and type `Ring outer` in the **New name** edit field.

**7** Click **OK**.

*Circle 2*

1 In the **Model Builder** window, under **Component 1>Geometry 1>Work Plane 1** right-click **Plane Geometry** and choose **Circle**.

2 In the **Circle** settings window, locate the **Size and Shape** section.

3 In the **Radius** edit field, type `r_ring-1.87`.

4 Right-click **Component 1>Geometry 1>Work Plane 1>Plane Geometry>Circle 2** and choose **Rename**.

5 Go to the **Rename Circle** dialog box and type `Ring inner` in the **New name** edit field.

6 Click **OK**.

*Rectangle 1*

1 In the **Model Builder** window, under **Component 1>Geometry 1>Work Plane 1** right-click **Plane Geometry** and choose **Rectangle**.

2 In the **Rectangle** settings window, locate the **Size** section.

3 In the **Width** edit field, type `2`.

4 In the **Height** edit field, type `3`.

5 Locate the **Position** section. In the **xw** edit field, type `-1`.

6 In the **yw** edit field, type `-9`.

7 Right-click **Component 1>Geometry 1>Work Plane 1>Plane Geometry>Rectangle 1** and choose **Rename**.

8 Go to the **Rename Rectangle** dialog box and type `Ring cut` in the **New name** edit field.

9 Click **OK**.

*Difference 1*

1 On the **Work plane** toolbar, click **Difference**.

2 Select the object **c1** only.

3 In the **Difference** settings window, locate the **Difference** section.

4 Click the **Active** button next to the **Objects to subtract** selection list.

5 Select the objects **r1** and **c2** only.

**6** Click the **Build Selected** button.

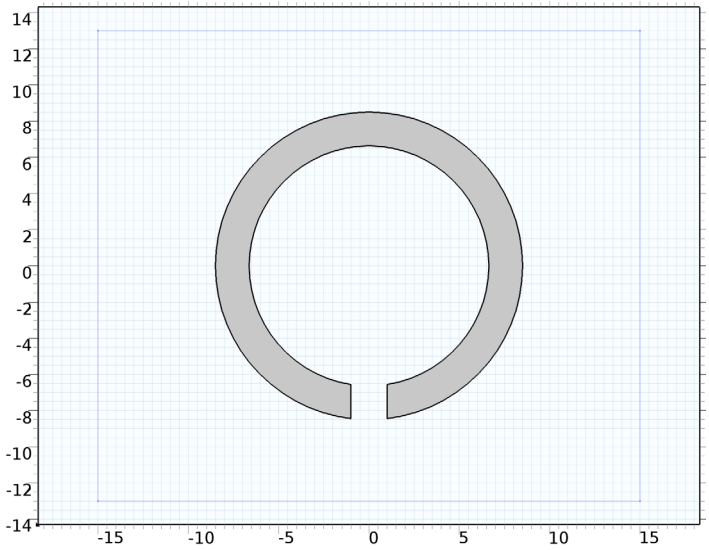


Add a rectangle for the 100 Ω resistor.

*Rectangle 2*

**1** In the **Model Builder** window, under **Component 1>Geometry 1>Work Plane 1** right-click **Plane Geometry** and choose **Rectangle**.

**2** In the **Rectangle** settings window, locate the **Size** section.

**3** In the **Width** edit field, type `2`.

**4** Locate the **Position** section. In the **xw** edit field, type `-1`.

**5** In the **yw** edit field, type `-8`.

**6** Right-click **Component 1>Geometry 1>Work Plane 1>Plane Geometry>Rectangle 2** and choose **Rename**.

**7** Go to the **Rename Rectangle** dialog box and type `Lumped element` in the **New name** edit field.

**8** Click **OK**.

Add rectangles for the 50 ohm microstrip feed lines.

*Rectangle 3*

**1** In the **Model Builder** window, under **Component 1>Geometry 1>Work Plane 1** right-click **Plane Geometry** and choose **Rectangle**.

**2** In the **Rectangle** settings window, locate the **Size** section.

3 In the **Width** edit field, type `3.2`.

4 In the **Height** edit field, type `5`.

5 Locate the **Position** section. From the **Base** list, choose **Center**.

6 In the **yw** edit field, type `10.5`.

*Rectangle 4*

1 Right-click **Plane Geometry** and choose **Rectangle**.

2 In the **Rectangle** settings window, locate the **Size** section.

3 In the **Width** edit field, type `3.2`.

4 In the **Height** edit field, type `2`.

5 Locate the **Position** section. In the **xw** edit field, type `-7`.

6 From the **Base** list, choose **Center**.

7 In the **yw** edit field, type `-12`.

*Rectangle 5*

1 Right-click **Plane Geometry** and choose **Rectangle**.

2 In the **Rectangle** settings window, locate the **Size** section.

3 In the **Width** edit field, type `3.2`.

4 In the **Height** edit field, type `6`.

5 Locate the **Position** section. In the **xw** edit field, type `-8.6`.

6 In the **yw** edit field, type `-11`.

7 Locate the **Rotation Angle** section. In the **Rotation** edit field, type `-28`.

*Mirror 1*

1 On the **Work plane** toolbar, click **Mirror**.

2 Select the objects **r4** and **r5** only.

3 In the **Mirror** settings window, locate the **Input** section.

4 Select the **Keep input objects** check box.

Create a union of all objects except the small rectangle for the resistor (r2) to remove unnecessary boundaries.

*Union 1*

1 On the **Work plane** toolbar, click **Union**.

2 Select the objects **mir1(1)**, **dif1**, **mir1(2)**, **r3**, **r4**, and **r5** only.

3 In the **Union** settings window, locate the **Union** section.

4 Clear the **Keep interior boundaries** check box.

5 Right-click **Component 1>Geometry 1>Work Plane 1>Plane Geometry>Union 1** and choose **Build All Objects**.

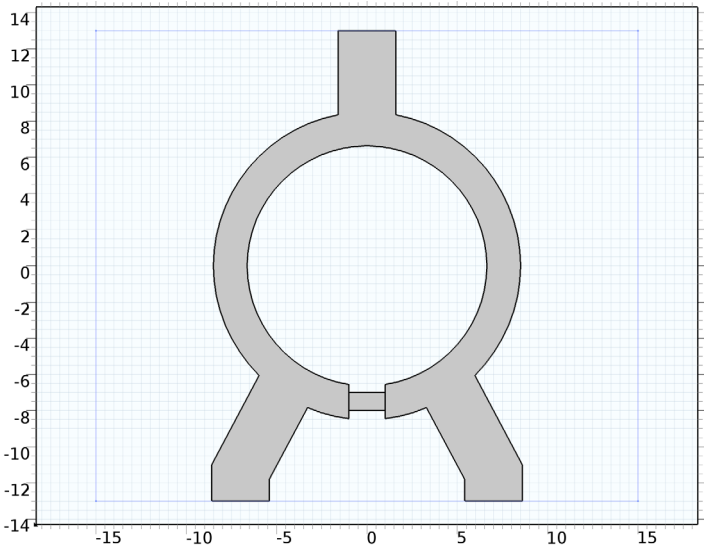


*The power divider layout drawn on the substrate.*

Create the coax SMA receptacle composed of the coax inner and outer conductors, the SMA connector part, and the flange.

*Cylinder 1*

1 On the **Geometry** toolbar, click **Cylinder**.

2 In the **Cylinder** settings window, locate the **Size and Shape** section.

3 In the **Radius** edit field, type `r_inner`.

4 In the **Height** edit field, type `l_sma+2`.

5 Locate the **Position** section. In the **x** edit field, type `-7`.

6 In the **y** edit field, type `-l_subs/2-l_sma`.

7 Locate the **Axis** section. From the **Axis type** list, choose **y-axis**.

8 Right-click **Component 1>Geometry 1>Cylinder 1** and choose **Rename**.

9 Go to the **Rename Cylinder** dialog box and type `Coax inner` in the **New name** edit field.

10 Click **OK**.

*Cylinder 2*

1 On the **Geometry** toolbar, click **Cylinder**.

2 In the **Cylinder** settings window, locate the **Size and Shape** section.

3 In the **Radius** edit field, type `r_outer+0.6`.

4 In the **Height** edit field, type `l_sma`.

5 Locate the **Position** section. In the **x** edit field, type `-7`.

6 In the **y** edit field, type `-l_subs/2-l_sma`.

7 Locate the **Axis** section. From the **Axis type** list, choose **y-axis**.

8 Right-click **Component 1>Geometry 1>Cylinder 2** and choose **Rename**.

9 Go to the **Rename Cylinder** dialog box and type `SMA` in the **New name** edit field.

10 Click **OK**.

*Block 3*

1 On the **Geometry** toolbar, click **Block**.

2 In the **Block** settings window, locate the **Size** section.

3 In the **Width** edit field, type `12.7`.

4 In the **Depth** edit field, type `12.7`.

5 In the **Height** edit field, type `1.65`.

6 Locate the **Position** section. From the **Base** list, choose **Center**.

7 In the **x** edit field, type `-7`.

8 In the **y** edit field, type `-(l_subs+1.65)/2`.

9 Locate the **Axis** section. From the **Axis type** list, choose **y-axis**.

10 Right-click **Component 1>Geometry 1>Block 3** and choose **Rename**.

11 Go to the **Rename Block** dialog box and type `Flange` in the **New name** edit field.

12 Click **OK**.

Create a union of a couple of objects, the SMA connector, and the flange to remove unnecessary boundaries.

*Union 1*

1 On the **Geometry** toolbar, click **Union**.

2 Select the objects **cyl2** and **blk3** only.

3 In the **Union** settings window, locate the **Union** section.

4 Clear the **Keep interior boundaries** check box.

*Cylinder 3*

1 On the **Geometry** toolbar, click **Cylinder**.

2 In the **Cylinder** settings window, locate the **Size and Shape** section.

3 In the **Radius** edit field, type `r_outer`.

4 In the **Height** edit field, type `l_sma`.

5 Locate the **Position** section. In the **x** edit field, type `-7`.

6 In the **y** edit field, type `-l_subs/2-l_sma`.

7 Locate the **Axis** section. From the **Axis type** list, choose **y-axis**.

8 Click the **Build Selected** button.

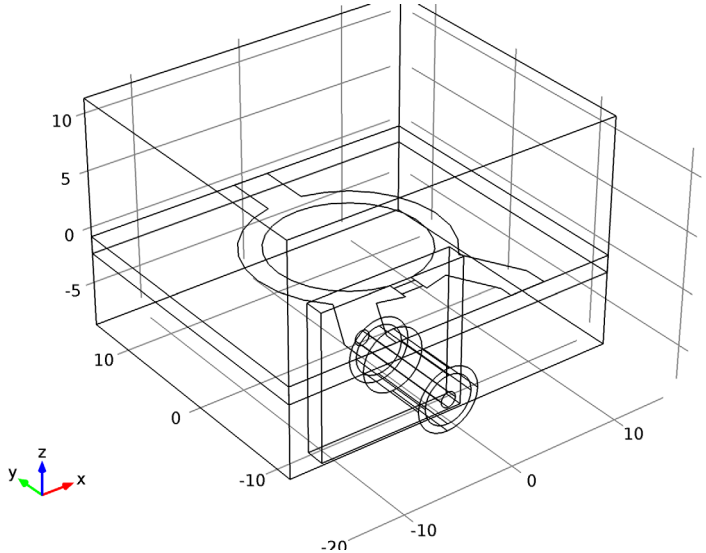


9 Right-click **Component 1>Geometry 1>Cylinder 3** and choose **Rename**.

10 Go to the **Rename Cylinder** dialog box and type `Coax dielectric` in the **New name** edit field.

11 Click **OK**.

Create two more SMA receptacles.

*Copy 1*

1 On the **Geometry** toolbar, click **Copy**.

2 Select the objects **uni1**, **cyl1**, and **cyl3** only.

3 In the **Copy** settings window, locate the **Displacement** section.

4 In the **x** edit field, type `7,14`.

*Rotate 1*

1 On the **Geometry** toolbar, click **Rotate**.

2 Select the objects **copy1(1)**, **copy1(3)**, and **copy1(5)** only.

3 In the **Rotate** settings window, locate the **Rotation Angle** section.

4 In the **Rotation** edit field, type `180`.

Add a cylinder for the metal screw.

*Cylinder 4*

1 On the **Geometry** toolbar, click **Cylinder**.

2 In the **Cylinder** settings window, locate the **Size and Shape** section.

3 In the **Height** edit field, type `8`.

4 Locate the **Position** section. In the **x** edit field, type `-12`.

5 In the **y** edit field, type `-10`.

6 In the **z** edit field, type `-8`.

7 Right-click **Component 1>Geometry 1>Cylinder 4** and choose **Rename**.

8 Go to the **Rename Cylinder** dialog box and type `Screw` in the **New name** edit field.

9 Click **OK**.

*Array 1*

1 On the **Geometry** toolbar, click **Array**.

2 Select the object **cyl4** only.

3 In the **Array** settings window, locate the **Size** section.

4 In the **x size** edit field, type `2`.

5 In the **y size** edit field, type `2`.

6 Locate the **Displacement** section. In the **x** edit field, type `24`.

7 In the **y** edit field, type `20`.

**8** Click the **Build All Objects** button.

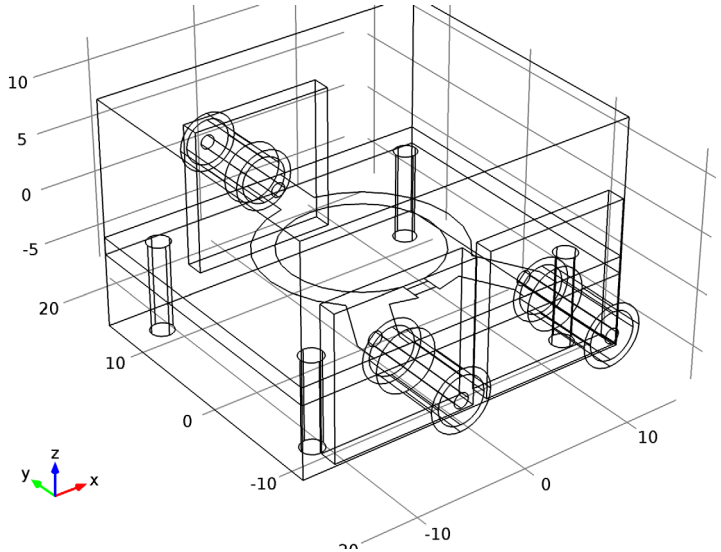


## DEFINITIONS

Create a set of selections to use when setting up the physics. Begin with the microstrip line boundaries including the substrate ground plane.

*Explicit 1*

**1** On the **Definitions** toolbar, click **Explicit**.

**2** In the **Explicit** settings window, locate the **Input Entities** section.

**3** From the **Geometric entity level** list, choose **Boundary**.

**4** Select Boundaries 6, 54, 61, 102, and 147 only.

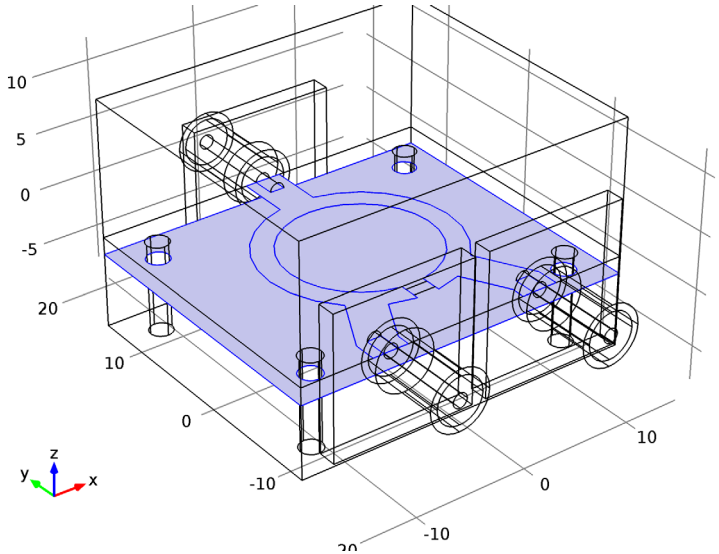


**5** Right-click **Component 1>Definitions>Explicit 1** and choose **Rename**.

**6** Go to the **Rename Explicit** dialog box and type `Microstrip line` in the **New name** edit field.

**7** Click **OK**.

Add a selection for the substrate.

*Explicit 2*

**1** On the **Definitions** toolbar, click **Explicit**.

**2** Select Domains 2, 11, 15, and 21 only.

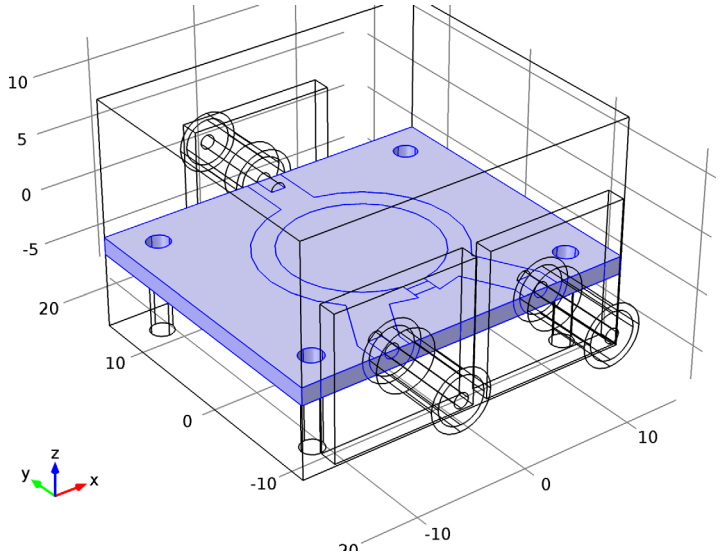


**3** Right-click **Component 1>Definitions>Explicit 2** and choose **Rename**.

**4** Go to the **Rename Explicit** dialog box and type `Substrate` in the **New name** edit field.

**5** Click **OK**.

Add a selection for the coax dielectric (PTFE).

*Explicit 3*

**1** On the **Definitions** toolbar, click **Explicit**.

**2** Select Domains 9, 14, and 19 only.

**3** Right-click **Component 1>Definitions>Explicit 3** and choose **Rename**.

**4** Go to the **Rename Explicit** dialog box and type `Coax dielectric` in the **New name** edit field.

**5** Click **OK**.

Add a selection for the domains consisting of metal. These domains are not part of the model analysis.

*Explicit 4*

**1** On the **Definitions** toolbar, click **Explicit**.

2 Select Domains 4–8, 10, 12, 13, 16–18, 20, and 22–26 only.

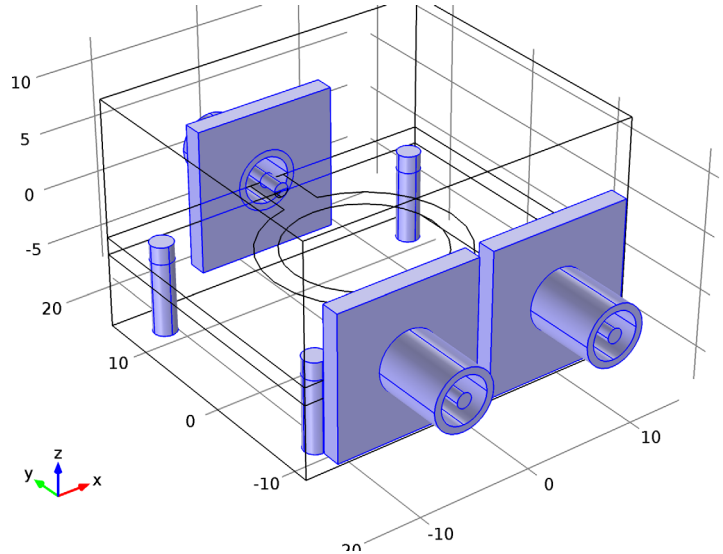


3 Right-click **Component 1>Definitions>Explicit 4** and choose **Rename**.

4 Go to the **Rename Explicit** dialog box and type `Metal volume` in the **New name** edit field.

5 Click **OK**.

Define the model domain, which is the complement of the metal volume selection.

*Complement 1*

1 On the **Definitions** toolbar, click **Complement**.

2 In the **Complement** settings window, locate the **Input Entities** section.

3 Under **Selections to invert**, click **Add**.

4 Go to the **Add** dialog box.

5 In the **Selections to invert** list, select **Metal volume**.

6 Click the **OK** button.

7 Right-click **Component 1>Definitions>Complement 1** and choose **Rename**.

8 Go to the **Rename Complement** dialog box and type `Model domain` in the **New name** edit field.

9 Click **OK**.

*View 1*

Suppress some boundaries to get a view of the interior while setting the physics and mesh.

1 In the **Model Builder** window, under **Component 1>Definitions** right-click **View 1** and choose **Hide Geometric Entities**.

2 In the **Hide Geometric Entities** settings window, locate the **Geometric Entity Selection** section.

3 From the **Geometric entity level** list, choose **Boundary**.

4 Select Boundaries 7, 8, and 10 only.

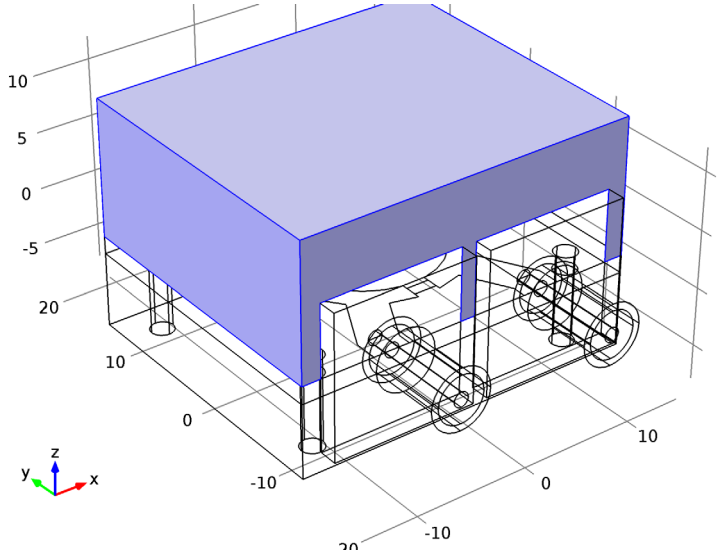


Now, set up the physics.

### ELECTROMAGNETIC WAVES, FREQUENCY DOMAIN

1 In the **Model Builder** window, under **Component 1** click **Electromagnetic Waves, Frequency Domain**.

2 In the **Electromagnetic Waves, Frequency Domain** settings window, locate the **Domain Selection** section.

3 From the **Selection** list, choose **Model domain**.

*Perfect Electric Conductor 1*

The Perfect Electric Conductor applies by default to all exterior boundaries. After restricting the Electromagnetics Waves, Frequency Domain interface to the model

domain, these outer boundaries include the coax SMA receptacles and the metal screws. Add a Perfect Electric Conductor condition to the microstrip line and the substrate ground plane.

*Perfect Electric Conductor 2*

1 On the **Physics** toolbar, click **Boundaries** and choose **Perfect Electric Conductor**.

2 In the **Perfect Electric Conductor** settings window, locate the **Boundary Selection** section.

3 From the **Selection** list, choose **Microstrip line**.

Proceed with the Lumped Port conditions.

*Lumped Port 1*

1 On the **Physics** toolbar, click **Boundaries** and choose **Lumped Port**.

2 Select Boundary 95 only.

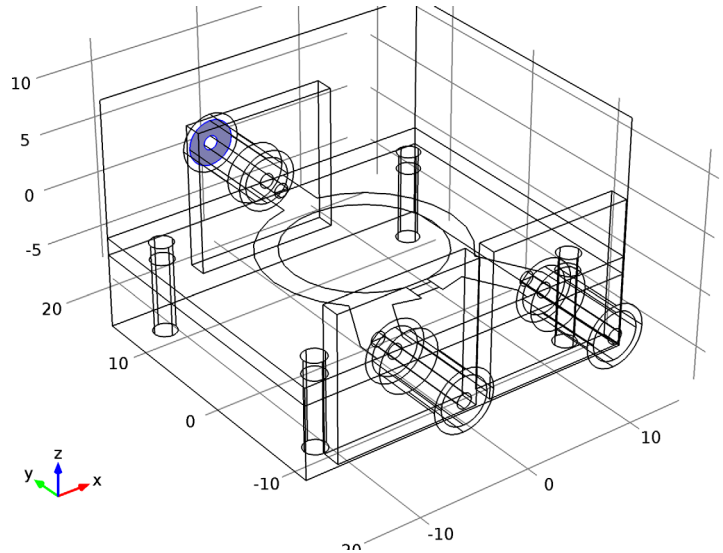


3 In the **Lumped Port** settings window, locate the **Lumped Port Properties** section.

4 From the **Type of port** list, choose **Coaxial**.

5 From the **Wave excitation at this port** list, choose **On**.

*Lumped Port 2*

1 On the **Physics** toolbar, click **Boundaries** and choose **Lumped Port**.

**2** Select Boundary 51 only.

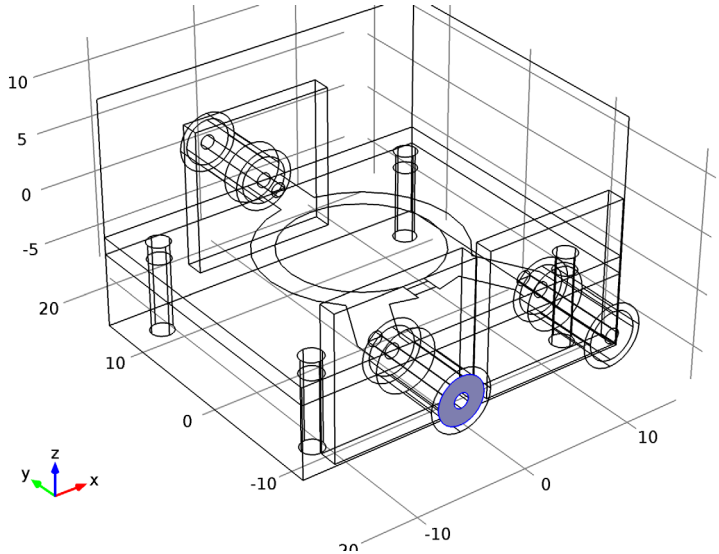


**3** In the **Lumped Port** settings window, locate the **Lumped Port Properties** section.

**4** From the **Type of port** list, choose **Coaxial**.

*Lumped Port 3*

**1** On the **Physics** toolbar, click **Boundaries** and choose **Lumped Port**.

**2** Select Boundary 136 only.

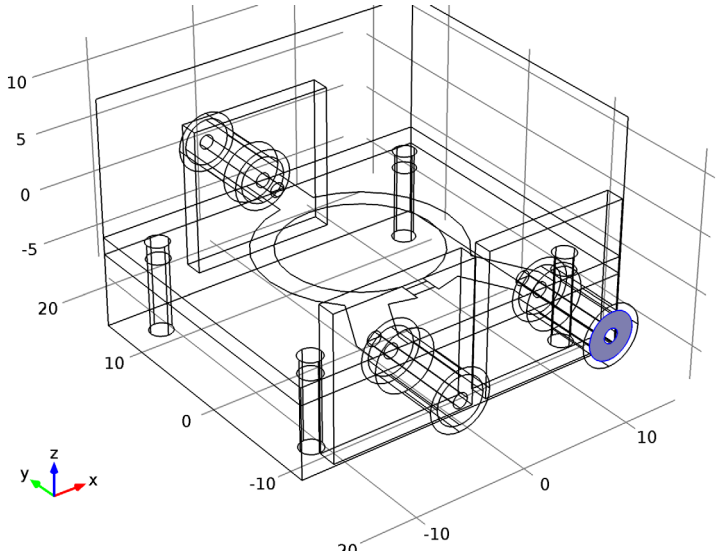


**3** In the **Lumped Port** settings window, locate the **Lumped Port Properties** section.

**4** From the **Type of port** list, choose **Coaxial**.

Add a lumped element for the 100 Ω resistor.

*Lumped Element 1*

**1** On the **Physics** toolbar, click **Boundaries** and choose **Lumped Element**.

**2** Select Boundary 97 only.

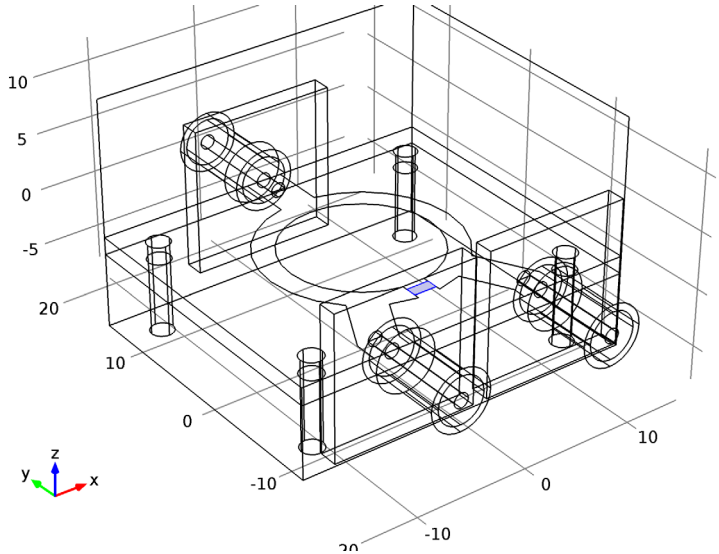


**3** In the **Lumped Element** settings window, locate the **Settings** section.

**4** In the $Z_{\text{element}}$ edit field, type `100[ohm]`.

### MATERIALS

Next, assign material properties. First, specify air for all domains.

**1** On the **Home** toolbar, click **Add Material**.

### ADD MATERIAL

**1** Go to the **Add Material** window.

**2** In the tree, select **Built-In>Air**.

**3** In the **Add material** window, click **Add to Component**.

**4** On the **Home** toolbar, click **Add Material**.

This closes the **Add Material** window.

### MATERIALS

Override the material for the substrate domains with a dielectric material of $\varepsilon_r = 3.38$.

*Material 2*

**1** In the **Model Builder** window, under **Component 1** right-click **Materials** and choose **New Material**.

2 In the **Material** settings window, locate the **Geometric Entity Selection** section.

3 From the **Selection** list, choose **Substrate**.

4 Locate the **Material Contents** section. In the table, enter the following settings:

| Property | Name | Value | Unit |
|---|---|---|---|
| Relative permittivity | epsilonr | 3.38 | 1 |
| Relative permeability | mur | 1 | 1 |
| Electrical conductivity | sigma | 0 | S/m |

5 Right-click **Component 1>Materials>Material 2** and choose **Rename**.

6 Go to the **Rename Material** dialog box and type `Substrate` in the **New name** edit field.

7 Click **OK**.

Similarly, override the coax dielectric domains with a material of $\varepsilon_r = 2.1$.

*Material 3*

1 Right-click **Materials** and choose **New Material**.

2 In the **Material** settings window, locate the **Geometric Entity Selection** section.

3 From the **Selection** list, choose **Coax dielectric**.

4 Locate the **Material Contents** section. In the table, enter the following settings:

| Property | Name | Value | Unit |
|---|---|---|---|
| Relative permittivity | epsilonr | 2.1 | 1 |
| Relative permeability | mur | 1 | 1 |
| Electrical conductivity | sigma | 0 | S/m |

5 Right-click **Component 1>Materials>Material 3** and choose **Rename**.

6 Go to the **Rename Material** dialog box and type `PTFE` in the **New name** edit field.

7 Click **OK**.

### MESH 1

Choose the maximum mesh size in the air domain smaller than 0.2 wavelengths using the parameter `h_max` that you defined earlier. For the dielectric materials, scale the mesh size by the inverse of the square root of the relative dielectric constant.

*Size 1*

1 In the **Model Builder** window, under **Component 1** right-click **Mesh 1** and choose **Size**.

2 In the **Size** settings window, locate the **Geometric Entity Selection** section.

3 From the **Geometric entity level** list, choose **Domain**.

4 From the **Selection** list, choose **Substrate**.

5 Locate the **Element Size** section. Click the **Custom** button.

6 Locate the **Element Size Parameters** section. Select the **Maximum element size** check box.

7 In the associated edit field, type `h_max/sqrt(3.38)`.

*Size 2*

1 In the **Model Builder** window, right-click **Mesh 1** and choose **Size**.

2 In the **Size** settings window, locate the **Geometric Entity Selection** section.

3 From the **Geometric entity level** list, choose **Domain**.

4 From the **Selection** list, choose **Coax dielectric**.

5 Locate the **Element Size** section. Click the **Custom** button.

6 Locate the **Element Size Parameters** section. Select the **Maximum element size** check box.

7 In the associated edit field, type `h_max/sqrt(2.1)`.

*Free Tetrahedral 1*

1 Right-click **Mesh 1** and choose **Free Tetrahedral**.

**2** Click **Build All**.

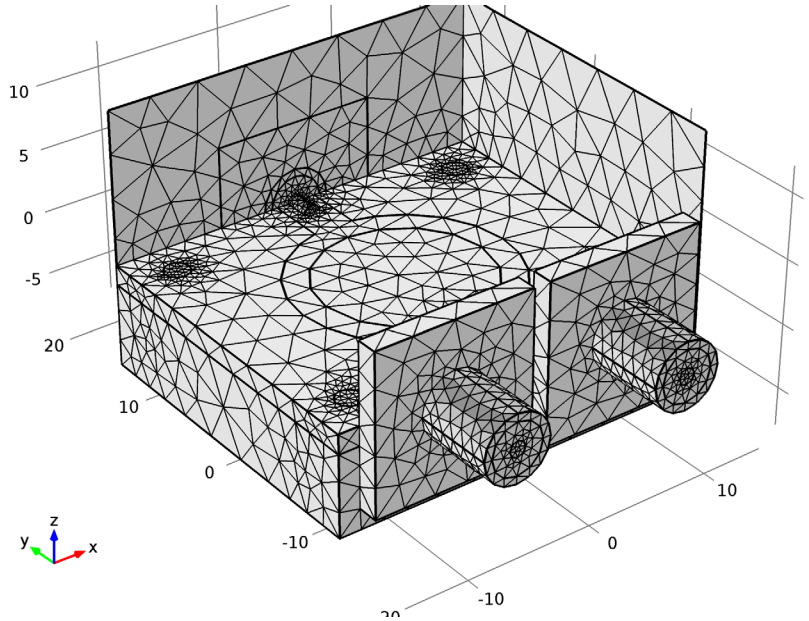


## STUDY 1

### *Step 1: Frequency Domain*

**1** In the **Model Builder** window, under **Study 1** click **Step 1: Frequency Domain**.

**2** In the **Frequency Domain** settings window, locate the **Study Settings** section.

**3** In the **Frequencies** edit field, type `range(f_min,0.1[GHz],f_max)`.

**4** On the **Home** toolbar, click **Compute**.

## RESULTS

### *Electric Field (emw)*

The default plot shows the E-field norm distribution. Change the settings to plot the E-field norm on the substrate.

**1** In the **3D Plot Group** settings window, locate the **Data** section.

**2** From the **Parameter value (freq)** list, choose **3e9**.

**3** In the **Model Builder** window, expand the **Electric Field (emw)** node, then click **Multislice 1**.

**4** In the **Multislice** settings window, locate the **Multiplane Data** section.

5 Find the **x-planes** subsection. In the **Planes** edit field, type 0.

6 Find the **y-planes** subsection. In the **Planes** edit field, type 0.

7 Find the **z-planes** subsection. From the **Entry method** list, choose **Coordinates**

8 In the **Coordinates** edit field, type 0.

9 Click to expand the **Range** section. Select the **Manual color range** check box.

10 In the **Maximum** edit field, type 1000.

The resulting plot shows the E-field equally split between Port 2 and Port 3. Compare with Figure 2.

### *1D Plot Group 2*

1 On the **Home** toolbar, click **Add Plot Group** and choose **1D Plot Group**.

2 On the **1D Plot Group 2** toolbar, click **Global**.

3 In the **Global** settings window, click **Add Expression** in the upper-right corner of the **y-Axis Data** section. From the menu, choose **Electromagnetic Waves, Frequency Domain>Ports>S-parameter, dB>S-parameter, dB, 11 component (emw.S11dB)**.

4 Click **Add Expression** in the upper-right corner of the **y-Axis Data** section. From the menu, choose **Electromagnetic Waves, Frequency Domain>Ports>S-parameter, dB>S-parameter, dB, 21 component (emw.S21dB)**.

5 Click **Add Expression** in the upper-right corner of the **y-Axis Data** section. From the menu, choose **Electromagnetic Waves, Frequency Domain>Ports>S-parameter, dB>S-parameter, dB, 31 component (emw.S31dB)**.

6 Click the **Plot** button.

The reproduced plot shows the calculated S-parameters. Compare with Figure 3.